Smithsonian Guidelines for

Accessible Exhibition Design

Smithsonian Accessibility Program

Smithsonian Guidelines for Accessible Exhibition Design

On Striving for Accessible Exhibition Design

Exhibitions are complex presentations that convey concepts, showcase objects, and excite the senses. However, as museums recognize the diversity within their audiences, they realize that exhibitions must do more: exhibitions must teach to different learning styles, respond to issues of cultural and gender equity, and offer multiple levels of information. The resulting changes in exhibitions have made these presentations more understandable, enjoyable, and connected to visitors' lives.

Accessible design must be a part of this new philosophy of exhibition development because people with disabilities are a part of museums' diverse audience. Discovering exciting, attractive ways to make exhibitions accessible will most directly serve people with disabilities and older adults. But to name an audience who will not benefit by these designs is impossible. Accessibility begins as a mandate to serve people who have been discriminated against for centuries; it prevails as a tool that serves diverse audiences for a lifetime.

Exhibition designers, curators, registrars, conservators, collections managers, designers, editors, developers, educators, and other exhibition team members each offer particular insights into the exhibition medium. All of you are in a unique position to synthesize accessibility solutions into your development processes. The Smithsonian challenges its exhibition teams to invent such solutions and to share those findings with colleagues through this document.

Smithsonian Guidelines for Accessible Exhibition Design is a living document. The design tools here, like all creative resources, must be mixed and matched and tested in different combinations to find workable solutions. Updates, adjustments and refinements will be distributed by the Accessibility Program as better tools are devised.

If you find new solutions or have questions, please contact the Accessibility Program.

With everyone's talents at work, the Smithsonian may find answers to questions not yet even asked.

Janice Majewski

Author

Smithsonian Institution
Accessibility Program
(202) 633-2921 Voice
(202) 633-4353 TTY
(202) 633-4352 Fax
access@si.edu

Mailing address:
PO Box 37012
NMAH, MRC 607
Washington, DC 20013-7012

Table of Contents

Section A Overview of Guidelines

Section B Guidelines and Tools

I. Exhibition Content
II. Exhibition Items
III. Label Design and Text
IV. Audiovisuals and Interactives
V. Circulation Route
VI. Furniture
VII. Color
VIII. Lighting
IX. Public Programming Spaces
X. Emergency Egress
XI. Children's Environments

Section C, Resources

Information and Services

Publications

Section D, Glossary

Section E, Appendix

Language Usage

Access Symbols

List of Illustrations (Including descriptions of the illustrations)

Production Notes

How to Use This Document

guidelines = accessibility standards that must be met by every exhibition presented at or by the Smithsonian. (designated in text by boldface capital letter)

design tools = methods for achieving those standards (designated in text by ■)

This document contains guidelines (listed together in the Overview section) as well as design tools (listed in conjunction with the guidelines in Section B). The guidelines are in part based on construction standards established for the Architectural Barriers Act of 1968, the Rehabilitation Act of 1973, and the Americans with Disabilities Act of 1990. They represent Smithsonian methods for arriving at the laws' required end: accessible exhibitions that work for people with disabilities as well as for the rest of the public. Together the guidelines become the Smithsonian standard for accessible exhibition design.

Section A

Overview of Guidelines

Overview of Guidelines

I. Exhibition Content

A. Exhibitions must make exhibit content accessible at multiple intellectual levels and present it through more than one sensory channel.

B. Exhibitions must include the experiences of people with disabilities within their content and presentation.

II. Exhibition Items

A. Items in exhibitions (e.g. artifacts, graphics, props) must be visually accessible to people.

B. Items essential to the exhibition's main theme must be accessible to people by tactile examination (e.g. touching artifacts, reproductions, models) and/or comprehensive audio description.

C. Items must not be placed in locations such that they create a hazard for visitors.

III. Label Text and Design

A. Essential information in exhibition label text must be accessible to people who have difficulty reading English.

B. Label design must present main exhibition copy legibly for all visitors. Such exhibition label information must be available within the galleries in alternative formats (e.g. Braille, audio) for people who cannot read print.

IV. Audiovisuals and Interactives

A. All exhibition interactives, audio-only programs (e.g. music with lyrics and texts of speeches), and audiovisuals with soundtracks produced by the Smithsonian must be either open or closed captioned.

If an audio presentation not produced by the Smithsonian is shown in the exhibition for more than three months it must be captioned. If an audio presentation not produced by the Smithsonian is shown for fewer than three months it may be accompanied by a verbatim script mounted directly next to it.

Soundtracks of ambient sounds must be identified whether captioning or a script is used. Sounds may also be identified in label text.

B. Interactives and audiovisuals that do not have soundtracks must carry labels stating that fact to assure deaf and hard-of-hearing people that they are not missing information.

C. Audiovisual programs and computer interactives that present information with images and print must be audio described.

D. Instructions for proper use of interactives must be accessible to all visitors.

E. Controls for and operation of all interactives must be accessible and usable by all visitors.

F. Use of interactives must be from a location accessible to people using wheelchairs or other assistive devices (e.g. canes, crutches); interactives must not be blocked by furniture or other obstacles.

V. Circulation Route

A. The circulation route within the exhibition must be accessible according to the requirements of the Smithsonian Guidelines for Accessible Design for Facilities and Sites.
B. The circulation route must be well lighted, clearly defined, and easy to follow.

VI. Furniture

A. All cases must provide viewing access to people who are short or seated as well as to those who are standing.
B. Cases and vitrines must not present a safety hazard to any visitor.
C. Seating must be provided in each exhibition. 50% of the seats must be accessible. Single-gallery exhibitions must have seating in a nearby corridor or in an adjacent gallery space.

VII. Color

A. Gallery colors (floors, walls, furniture) must create an environment that is clearly articulated, comfortable and safe.
B. The colors and patterns of exhibition floor surfaces must give accurate information about the depth, height, and condition of the floor surface.
C. Colors within cases must provide clear visual access to objects inside.
D. Colors for labels must have a high contrast between text and background.

VIII. Lighting

A. The safety of visitors (particularly those with low vision and visual perceptual difficulties) must receive equal consideration with exhibit design and conservation issues.
B. Light and color must combine to produce a clearly delineated circulation route into, through, and out of every exhibition space. This is a particular requirement whenever there are changes in level or unexpected turns or obstacles in the route.
C. There must be sufficient light on objects to make them visible to all visitors unless the light level will do substantial damage to the objects.
D. There must be sufficient light on labels to make them readable by all visitors.
E. The elimination of glare from cases and on labels must be considered for those visitors who are seated as well as for those who are standing.
F. Sufficient light to accommodate speechreading and sign language conversation must be provided in locations throughout the exhibition space.

IX. Public Programming Spaces

A. In places of assembly with fixed seating, there must be a number of wheelchair locations provided in compliance with the requirements of the Smithsonian Guidelines for Accessible Design for Facilities and Sites. These locations must be dispersed throughout the seating area.
B. If seating is in the form of benches, the same number of benches with arm and back support as wheelchair locations required in the Smithsonian Guidelines for Accessible Design for Facilities and Sites must be provided.
C. Where there is fixed seating, there must also be aisle seats (one percent of the total number, with no fewer than one) that have no armrests, swing-away armrests, or

removable armrests. These seats must be dispersed throughout the programming space.

D. Each seat without an armrest or with a removable or swing-away armrest must be identified on the armrest by the international symbol of access.

   Signs notifying patrons of the existence of these chairs must also be posted at the entrance to the space. All signs must meet accessibility requirements.

E. Stages, dressing rooms, and other areas for performers associated with public programming areas must be accessible, according to the requirements of the Smithsonian Guidelines for Accessible Design for Facilities and Sites.

F. Assistive listening systems must be provided in all public programming spaces.

G. If the programming space is always kept dark, assistive devices (e.g. handrails, strip lighting) must be available to make accessible the route in, through, and out of the space.

H. Seating color and material must make seats visually accessible to everyone.

X. Emergency Egress

A. There must be fully accessible emergency egress from the exhibition spaces. Provide as many accessible emergency exits from an exhibition space as the number of fire exits required by the National Fire Protection Association's Life Safety Code (NFPA 101).

B. Design the exits from the exhibition to either lead back to the accessible entry route or to lead directly to another accessible egress route.

C. Notification about locations of accessible egress from the gallery must be available at key points in the museum.

D. Both visual and audible fire alarm systems must be provided.

XI. Children's Environments

A. Areas designed specifically for children must meet the children's accessibility recommendations by the Architectural and Transportation Barriers Compliance Board.

Section B

Guidelines and Tools

The Professional Basketmaker

When he was three years old, Hiroshima Kazuo dislocated his hip, an injury that was considered untreatable and left him with a permanent limp. Kazuo was therefore unable to help his parents and seven siblings work their fields, which were terraced along a mountainside; neither, as the second son, would he inherit any land. And so he became an apprentice to a local basketmaker at fifteen, taking up the life of an itinerant basketmaker three years later.

Fig. 1 Including people with disabilities in exhibit text
Text courtesy Arthur M. Sackler Gallery

Yes	No
People with disabilities	the handicapped, the disabled
People who are deaf or hard of hearing	the hearing impaired, deaf-mute
People who are blind or have low vision	the blind, the sightless
Wheelchair users	those confined to wheelchairs, wheelchair bound
People with mobility impairments	the crippled, the lame
People with cognitive disabilities	the retarded, the mentally deficient
People with mental illness	schizophrenic (as a generic) the insane
People with learning disabilities	dyslexic (as a generic), the retarded

Fig. 2 Use language that appropriately describes people with disabilities

I Exhibition Content

A. Exhibitions must make exhibit content accessible at multiple intellectual levels and present it through more than one sensory channel.

■ **Offer a programmatic path for traveling through the exhibition.**

People with cognitive disabilities (e.g. learning disabilities, mental retardation), like most individuals, learn best from an orderly presentation. An exhibition that reveals its topic through an obvious story line, theme, or repeated element offers landmarks, repetition, and a connecting thread to follow a complex presentation.

An instructional path can be imposed on a more free-flowing exhibition by the use of in-gallery printed handouts or an audiovisual kiosk. The route can also be presented in introductory labels or captioned photographs.

> ***Example***: An introductory label or brochure can explain simply one or two themes that are carried through an exhibition. The label could be accompanied by a photograph-coded printed floor plan showing places where those themes are best illustrated. Photo-coded labels within the spaces can pose questions about the themes to further understanding.

■ **Present information to all the senses.**

Deaf and hard-of-hearing people need audio information translated into print. People with visual impairments need printed information in audio and tactile formats. People with cognitive disabilities may need a combination of formats. Multisensory presentations provide choices for the sensory channel used and interesting repetitions of key points. Some people, however, have difficulty sorting overlapping sights and sounds. Balance noisy and quiet areas within the exhibition and isolate sound through receivers or acoustic treatments.

> ***Example***: A history exhibition can present a captioned video with a descriptive narration on how and where a period garment was worn. Visitors can try on the garment in a nearby hands-on room with a time-appropriate mural as backdrop.

B. Exhibitions must include the experiences of people with disabilities within their content and presentation.

■ **Include people with disabilities in exhibition topics, photographs, and presentations of perspectives (Fig. 1).**

Individuals with disabilities have contributed significantly to history, science, music, and art, among other areas. They are also a vital part of society. Yet rarely are they seen in the visual images, text, or general content of exhibitions.

■ **Use the voice of people with disabilities.**

Many topics in today's society integrally involve people with disabilities. Yet when those topics are presented, perspectives of disabled people often are either not represented or are misrepresented by those who do not have disabilities. Invite people with disabilities to speak for themselves in exhibitions.

> ***Example***: In an exhibition on scientific advancements, the issue of genetic engineering directly involves people with disabilities: If science can change genes carrying deafness, will that effort eradicate future generations of congenitally deaf people and, therefore, the culture of some deaf people--A deaf sociologist's perspective based on broad research of people who are deaf and hard of hearing could be presented in a video or in label text.

■ **Include people with disabilities appropriately.**

Many if not most people with disabilities do not see themselves as victims deserving pity or as courageous souls overcoming great obstacles. Instead, they see themselves and want to be seen as people accomplishing daily and lifelong objectives using their own abilities. (See Fig. 1.)

■ **Exhibition labels must use appropriate language when discussing issues related to people with disabilities (see Fig. 2)**

II Exhibition Items

A. Items in exhibitions (e.g. artifacts, graphics, props) must be visually accessible to people.

■ **Mount small items (to center line) at no higher than 1015 mm (40 in.) above the floor.**

A male adult who uses a wheelchair has an average eye level of between 1090 mm (43 in.) and 1295 mm (51 in.) above the finished floor see Fig. 3). Objects placed above 1015 mm (40 in.) will be seen only from below by most seated and short viewers.

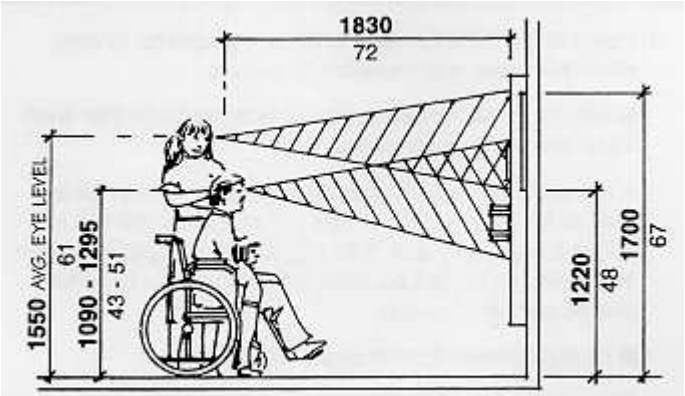

Fig. 3 Average viewing sightlines

■ **Design simple backdrops for items.**

Objects mounted against complex backgrounds (e.g. a vessel mounted against an enlarged photograph of an archaeological dig) are difficult to see for people with low vision and for those with figure-ground perceptual problems. (Figure-ground problems cause difficulty in sorting foreground from background. People with this disability, then, have difficulty finding, for example, their keys atop a desk covered with a variety of office objects.) Multiple objects staggered from the front to the back of a case may also cause visual clutter and foreground-background discrimination problems for some people.

■ **Construct the top of a case at a maximum of 915 mm (36 in.) above the finished floor for items that are mounted flat on a pedestal or deck. For larger items, maintain the minimum case height possible.**

If the case floor is low but the glass is high, viewing the interior of a bowl or the overall design of a textile is blocked for both visitors with visual and mobility impairments. The standing visitor with low vision cannot get close enough to the object to see the details; the seated visitor cannot see the object's top or interior at all. Shallow cases better serve both types of visitors (see Fig. 6).

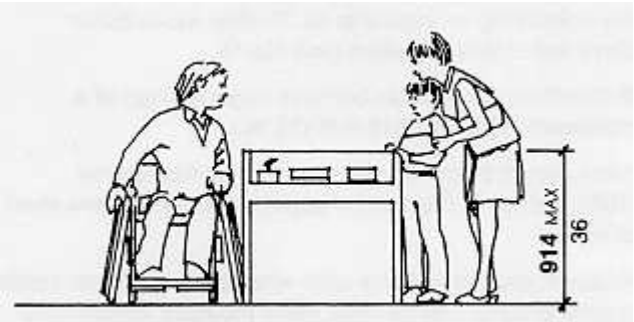

Fig. 6 Height of table case

■ **Construct exhibition barriers (e.g. railings) at a maximum height of 915 mm (36 in.).**

Items placed below an average-height exhibit barrier (1065 mm; 42 in.) cannot be seen by people who are short or seated. However, caution must be used when placing objects inside spaces protected by barriers. Items mounted immediately inside the barriers, if the barriers are label rails, cannot be seen over the tops of the angled labels.

■ **Create color contrast between the items and the background, particularly when the items are displayed in lower light levels.**

Objects mounted in front of a solid, contrasting (color) background are most easily perceived. A 70% contrast between foreground and background is recommended. The Americans with Disabilities Act Standards for Accessible Design offers the following formula for determining contrast percentage:

Contrast = [(B1-B2)/B1] x 100
where B1 = light reflectance value (LRV) of the lighter area
where B2 = light reflectance value (LRV) of the darker area

> *Note that in any application both white and black are never absolute; thus B1 never equals 100 and B2 is always greater than 0.*

■ **Place small items in the front portion of a case, with larger items behind.**

People who have low vision often will be able to see small items that are closer.

■ **Avoid shadows falling directly on items.**

Items placed in shadows will be lost for people with low vision.

■ **When not prohibited from doing so by conservation requirements, provide at least 100 lux (10 footcandles) of light on an object.**

This is the minimum light level at which someone with low vision can see an object (see Fig. 8).

Fig. 8 Accessible Lighting Levels

Ambient lighting	50-300 lx	5-30 fc
Text panels	100-300 lx	10-30 fc
Controls	100 lx	10 fc
Directional signage	200-300 lx	20-30 fc
Specimens, objects	100-300 lx	10-30 fc
Ramps, stairs	100-300 lx	10-30 fc
Visitor pathways	100-300 lx	10-30 fc

- See Lighting section for handling of light-sensitive objects

Courtesy Parks Canada, Design Guidelines for Media Accessibility

■ **If displaying sensitive materials that require a maximum of 50 lux (5 footcandles), then:**

- position the items to allow the visitor to approach them as closely as possible
- light the environment with even light (i.e. do not spotlight the object and provide low-level ambient light in the gallery)
- provide the highest contrasting background to make objects stand out in the case
- present the objects in an alternate format, such as a reproduction or a brochure, that can be viewed in a brighter location

■ **Provide photographs within an exhibition space to give accessibility to objects that require a high mounting position and/or low lighting.**

Laminated, high-contrast photographs, located near the individual exhibits or centrally set within the exhibition, are effective in serving those with low vision as well as those who use wheelchairs. People can hold the photographs as close as needed, at whatever angle limits glare, and in the best quality light offered within the space (see Fig. 7).

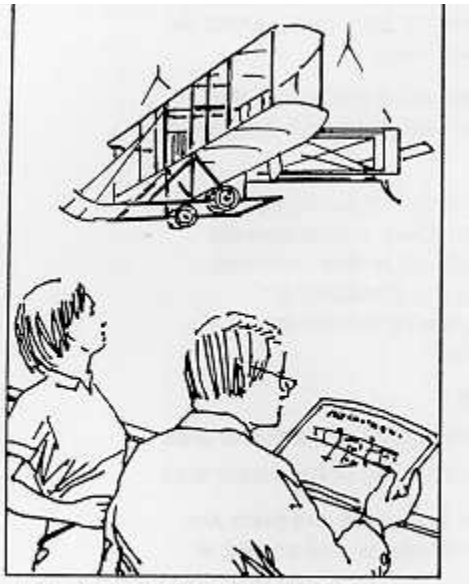

Fig. 7 Providing alternate access using photographs of objects

B. Items essential to the exhibition's main theme must be accessible to people by tactile examination (e.g. touching artifacts, reproduction, models) and/or comprehensive audiodescription.

■ **When objects are being selected for inclusion in an exhibition, consider those that may be touched or reproduced for tactile examination.**

Tactile experiences are essential to people with visual impairments and greatly assist many people with cognitive disabilities. Tactile experiences should be included in every exhibition.

■ **Select tactile objects so that they provide a coherent explanation of the exhibition topic.**

Touchable objects must be related to each other--by context and in space--in order to provide true access to exhibition content for people who have visual impairments.

***Example**:* In an exhibition on contemporary basketmaking, the museum chooses two or three pieces of the basketmaker's work that are examples of his most important techniques or products. The museum then includes them--or their reproductions--in the space, wherever they are appropriate for the content and design of the exhibition. It then also presents an audiodescription tour--by either an audiotape or a docent--that explains how these touchable examples relate to the others behind glass.

■ **Whenever possible allow objects to be touched by all visitors, not just those who have low vision or are blind.**

Tactile access to all visitors may not always be possible (e.g. if actual works of art are used, and only limited touching by those to whom it is essential can be allowed). However, isolating individuals may embarrass those who first must identify themselves and then must handle objects in front of others. The restriction also puts an unfair burden on the guards and docents who must identify "legitimate" users. It also deprives many who could benefit by the accommodation.

■ **Include touchable objects, such as models and reproductions, within the actual exhibition space.**

This allows people with visual impairments equal access to the objects without having to separate from their friends or family who are not blind or have low vision.

■ **Provide audiodescription for those objects that cannot be touched or that offer little information through touch (e.g. watercolors).**

Audiodescription fills in what persons with low vision may not be able to see completely; it provides details and compares new objects to familiar ones for people who are blind. When tactile examination is possible, audiodescription can serve as a valuable complement (see Fig. 9).

The elderly Dr. Spitzer stands with his wife. Now, the distant shuttle launch pad.

01:27:07:00

01:27:16:01 Card 69

[TALKOVER}

("...liftoff for the Space Shuttle *Discovery*.")

Twin clouds billow from either side of the shuttle as it rises, piggybacked on the vertical booster rocket. A churning, grey column of smoke spills from the rocket's firey white exhaust. As it approaches the cloud cover, the trunk of spreading smoke in its wake. Standing on bleacher steps, Dr. Spitzer and his wife kiss. Now, in space. Held by the shuttle arm, the shiny Hubble telescope hovers above us in the cargo bay.

01:27:45:06

Fig. 9 Sample of audiodescription script (for film: "Destiny in Space")
Courtesy the National Air and Space Museum

C. Items must not be placed in locations such that they create a hazard to visitors.

■ Mount objects so they do not protrude more than 100 mm (4 in.) from a surface and do not present head-clearance problems.
Objects that are wall mounted must protrude no more than 100 mm (4 in.) from the wall unless their bottom edges are cane detectable (less than 685 mm [27 in.] above the floor) (see Fig. 26) or more than 2030 mm (80 in.) above the floor.

Fig. 26 Cane detection of wall-hung case

Objects hanging from above must have lower edges between 685 mm (27 in.) or above 2030 mm (80 in.). (See Fig. 25.) This is a critical factor when the object or work of art has features that make it dangerous.

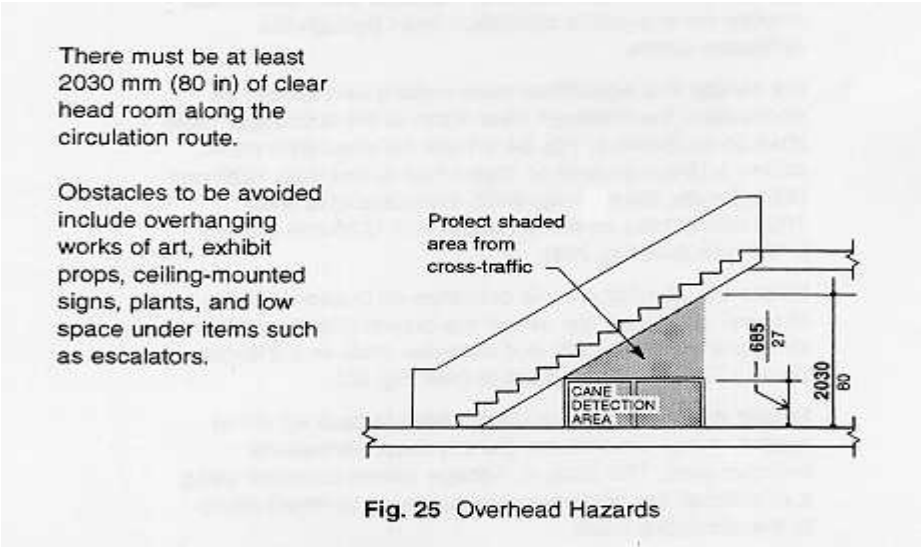

Fig. 25 Overhead Hazards

Example: a work of art consisting of I-beams bolted together, hanging at 1525 mm(60 in.) above the floor, is a head-clearance problem for people who are blind or have low vision or have visual-perceptual difficulties. Placing a detectable warning surface on the floor does not by itself resolve this problem. The surface must be part of a comprehensive system in the museum about which the visitor is aware. Other possible solutions are barriers around the work, a cane-detectable platform underneath the work, corridors allowing the visitor to pass without approaching the work, and a comprehensive audio-information system that alerts visitors to upcoming danger.

■ **Mount objects so that they are not tripping hazards.**

Low-height (less than 305 mm (12 in.) above the floor) objects mounted on floors can be missed by people with limited fields of vision. If these objects must be floor mounted, they must be placed out of the path of circulation, be well lighted, and have a surface color of high contrast to the floor.

Example: Mounting a work of art that is a block of aluminum 150 mm (6 in.) high on a gray carpet within a circulation corridor presents a tripping hazard to people with visual impairments. A barrier or a platform that raises the object are preferable. If those options are impossible, change the carpet color to charcoal gray, raise the general light level, spotlight the piece to create a glare off of it, and place the object's label on the other side of the corridor to draw people away from walking into the object.

- **Ensure that platforms for objects are not tripping hazards.**

Platforms should have colors that are of high contrast to the floors and walls, should not have sharp corners, and should not project unpredictably into the path of travel.

III Label Design and Text

A. Essential information in exhibition label text must be accessible to people who have difficulty reading English.

■ **Avoid the use of colloquial and complex English, jargon, and technical language in text panels unless such language is explained within the text or in supplementary handouts.**

Many individuals who are deaf from birth learn English as a second language (with American Sign Language, a distinct language, being their first). Thus, a congenitally deaf person often does not comprehend the nuances of written English as a native speaker can. Information key to the story should be written in plain English.

■ **Use the active voice in text panels; limit sentence label length.**

People who have difficulty reading English are most successful when the active voice is used in short sentences. Subject-verb-object sentence structure ensures better understanding. Sentence length should be no more than 25 words (15 is preferable). Label length should be a maximum of 75 to 100 words.

■ **Use a line length for text that facilitates reading.**

Text containing too many characters on a line is difficult to read. Exhibit text should have a maximum of 55 characters (average) per line. Narrower columns, with 45-50 characters per line, are preferable.

■ **Provide a short overview paragraph at the beginning of introductory and thematic label panels.**

People with reading difficulties as well as those with low vision tire easily from the effort of seeing and reading a great number of printed words. An overview sentence or two--set in clear, large print--allows these visitors to gather key information without having to read all of the text (see Fig. 10).

Visual Journal:
Harlem and D.C. in the Thirties and Forties

Photographers were honored members of the African American community during the 1930s and 1940s. They recorded the lives of black people, their cultures, and the changes African Americans experienced in the United States at that time. This exhibition shows you the work of seven photographers who documented people and events in Washington, D.C., New York City's Harlem, and rural Virginia.

Photographers are visual storytellers. They illustrate our place in society, document our dreams, and preserve powerful memories. In the 1930s and 1940s, in cities all over America, the black public was enthusiastic about having their image preserved at the local studio. They enshrined their local photographers who, encouraged by the numerous

Fig. 10 Writing a short overview paragraph (overview shown in boldface)
Text courtesy the Center for African American History and Culture

■ **Carefully link sentences and paragraphs.**

Avoid pronouns that are more than a few words away from their antecedents. Try to limit a sentence or paragraph to one idea. Be sure that when making comparisons, the points of comparison are obvious.

■ **Provide line drawings, silhouettes, and photographs that complement label text to aid comprehension for those with reading difficulties (see Fig. 11).**

Vessel
Before 1930
Teke peoples, Congo and Zaire
Fired clay, incised decoration, slip
Ex-collection J. Walscharts
89-13-49

Water jar
Before 1920
Songo people, Zaire and Angola
Fired clay, incised decoration
89-13-6

Fig. 11 Line drawings, silhouettes, and photographs aid comprehension
Drawings and text courtesy the National Museum of African Art

B. Label design must present main exhibition copy legibly for all visitors. Such exhibition label information must be available within the galleries in alternative formats (e.g. Braille, audio) for people who cannot read print.

■ **Use typefaces that are readily legible.**

The typefaces that are easiest for people who have low vision, language problems, or cognitive disabilities are sans serif or simple serif (see Fig. 13).

Accessible faces have the following characteristics:

- proportions that contribute to legibility (see Fig. 13)
- a clear extension for lowercase b, d, g, h, j, k, l, p, q, t, and y
- easily legible numbers (e.g. distinguishable 5, 6, and 8)

Fig. 13 Font Proportions
Courtesy Parks Canada
Design Guidelines for Media ***ssIbilfty***

Font Proportions

The proportions of a font refer to rts width, x-height, and weight. Blld contribute to legibiiiHy.

Width (percentage of width to height of the upper-case 'X') should be 65%-95% for accessibiiHy.This includes most condensed. roman, or regular fonts (Helvetica Regular is 89%). Serifs bias this figure somewhat;allowable widths in this case would be 75%-t05%. Extended faces (wHh widths greater than 95% lor sans serif, t05% lor serif) are less readable. If width is adjusted using desktop publishing software (horizontal scaling'), care should be taken not to exceed the recommended proportions.

X-height (percentage of the height of the lower case 'x' to the upper-case "X') should be 65%-75%. Few fonts have higher x-heights (Helvetica ReguJar is 72.5%);if a font with a lower x-height is used, the type size shall be increased to achieve readability.

Weight (percentage of width of the vertical stroke of the lower-case 'h' to the height of the upper-case 'X') shou d be 10%-15% *tor* text This corresponds roughly to the roman or regular proportion (Helvetica Regular is t2%).Certain faces. generally serifs, have hicks'and 'thins' n their stroke weights;these faces are more readable if the thicl<s are tO%-t5% of the height of the upper-case 'X'and the thins no less than 5%.

---

1 A$ibl¢ for 1CXI HelveticRegulnr

ABCOEFGHIJKLMabcdefghijklmnopqrstuvwxyz

---

2 Nacoessib!a (too light) Helvetica Light

ABCDEFGHIJKLMabcdeighijklmnopqrstvvwxyz

---

3 Not accessible {too botd) He1veuca Bl1lek

ABCDEFGHIJKLMabcdefghijklmnopqrstuvwxyz

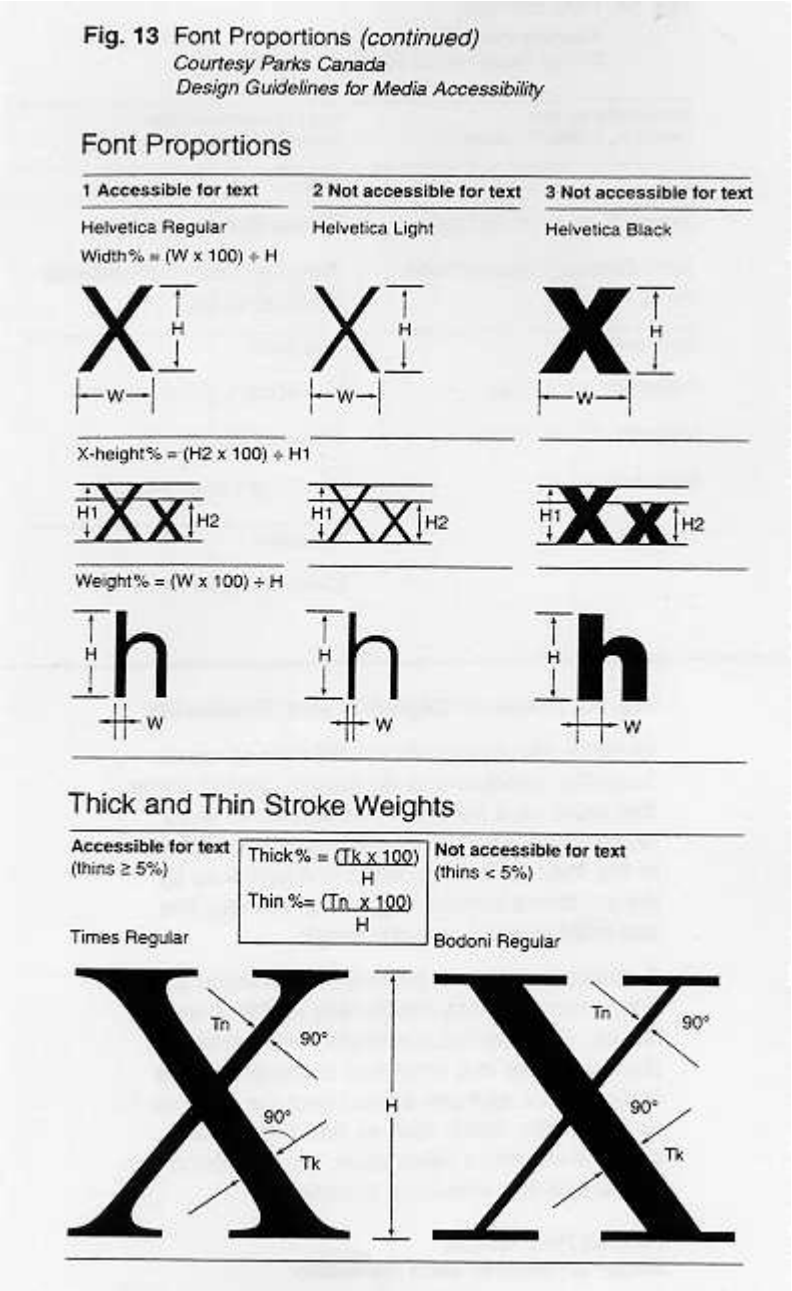

The following characteristics of type make reading difficult for this audience see Fig 14):

- condensed, extended, or relatively light typefaces
- a wide variation in stroke width
- thin strokes that fade, break, or disappear
- letter and numbers that closely resemble each other (e.g. the shapes of "d" and "a" or "6" and "8").

Fig. 14 Font Samples

Courtesy Parks Canada
Design Guidelines for Media Accessibility

Accessible for text (weight %, x-height %, width %)	Not accessible for text (weight %, x-height %, width %)
Serif	Serif
Times Roman (11, 69, 105)	**Times Bold** (19, 67, 101)
New Century Schoolbook (13, 71, 103)	**New Century Schoolbook Bold** (22, 69, 106)
Sans Serif	Sans Serif
Helvetica (12, 72.5, 89)	Helvetica Light (7, 72.5, 81)
Univers 55 (14, 70, 93)	Univers 45 (7, 71, 84)
Futura (12, 62, 77)	Futura Light (6, 61, 63)
	Decorative
	Linoscript (9, 31, 130)

■ **Do not set text in all caps.**

Type set in all caps is more difficult to read and should be limited to items such as titles and decorative heads.

■ **Avoid use of script and italic type for essential information.**

These styles are inaccessible to people with low vision. Oblique type is, however, generally legible.

Alternatives to italic type for book citations, artwork titles, foreign words, and quotations such as underlining, bold face, quotation marks, or another color should be used whenever possible.

If an exhibition title is presented in an ornate or decorative type (and, thus, serves more as a graphic than as legible type), it should be repeated in a clearer type at an accessible location near the exhibition entrance (see Fig. 15).

Fig. 15 Notes on 'Legibility' and 'Readability'

Legibility and readability are different concepts. 'Legibility' refers to how the design of letter forms that make up a particular font influences word recognition. Legibility contributes to 'readability', or the ease of reading, which is determined by the combined impact of type size, kerning, line and word spacing, and line length.

A particular font may evoke a certain mood or time period, but may not be very legible if used for text. For instance, a designer who wishes to display a letter in a script font to suggest it was written with a quill pen should treat the letter as an illustration, rather than as text. If the letter contains important information, a transcription in a legible font should be provided.

Courtesy Parks Canada,
Design Guidelines for Media Accessibility

■ **Provide alternative forms of labels (e.g. Braille, audio, large print) within the exhibition space.**

They should be located near a well-lighted seating area in an easy-to-use format to facilitate use by visitors with visual impairments.

■ **Select type size appropriate to the viewing distance.**

People who have low vision will need larger type than other visitors at every distance. Appropriate ratios type to distance are presented in Fig. 12. When calculating distance, consider also the effects of crowds on actual viewing distance. Type on signs mounted 2030 mm (80 in.) above the floor should have upper case letters at least 75 mm (3 in.) high. Minimum type size, at even the shortest distance, is an x-height of 4.5 mm (3/16 in.)

Fig. 12 Accessible Type by Probable Viewing Distance

Probable viewing distance	Interpretative exhibits minimum type size (Helvetica Reg.)	
	X-height mm (in)	Set size (pt)
Less than 75 mm (3 in)	4.5 (3/16)	24
1 m (39 in)	9 (3/8)	48
2 m (78 in)	19 (3/4)	100
3 m (118 in)	28 (1-1/8)	148

Courtesy Parks Canada, Design Guidelines for Media Accessibility

■ **Provide sufficient leading.**

Leading, the space between lines (measured from baseline to baseline) should be at least 20 percent greater than the font size used. Wide column widths and typefaces with a high x-height usually require a higher ratio of type size to leading.

■ **Provide consistent letterspacing and word spacing.**

Consistent spaces between letters and words facilitate reading of text passages. If kerning between letters is adjusted do not allow letters to touch each other.

■ **Justify the left margin and keep a ragged right margin.**

Do not center more than three lines of label text. A predictable beginning point, line after line, and evenly spaced words are much easier to read for people with low vision and for people with cognitive disabilities. Justified text can work only if normal word and letter spacing can be preserved.

■ **Provide high contrast between text and background.**

Contrast is an essential element for people with low vision. Research shows that dark on light works marginally better than light on dark for headlines. Light on dark text is acceptable for back-lit labels when light intensity is moderated (e.g. by gels) to avoid light "halo". A 70% light reflectance value contrast is most effective.

Lighter type weight and greater letter spacing is required when type is reversed out of the background to ensure legibility.
For outdoor signage, light type reversed out of a dark field may be desirable to offset glare.

■ **Print only on a solid background.**

Overprinting (type on an imaged background) is unreadable for people with low vision and perceptual difficulties. The most minimal contrast--5% contrast to the background--overprinted with the darkest type available, may present legible text.

Print on a surface that is textured or that has differing colors and tones (e.g. faux marble, woodgrain) can result in the same illegibility as overprinting.

■ **Diminish glare on all label surfaces.**

Glare makes text unreadable for many people with low vision. Labels should be printed on eggshell, matte, or other non-glare surfaces.

■ **Avoid distorting type.**

Labels should be silkscreened on clear plexiglass with another background color screened directly onto the back of the plexiglass. Clear plexiglass labels mounted on a solid surface have letter shadows that make them unreadable.

■ **Mount labels so that visitors can get very close to read them.**

People with low vision often must be within 75 mm (3 in.) of a label to read it. Label and location should be situated so that the reader does not block his own light. Label location should be out of the way of barriers, protruding objects, stairs, or the swing of a door.

■ **Keep in mind the natural line of sight when mounting labels.**

Labels mounted at 45 degree angles to the front of a case or vitrine are more accessible to people who have low vision than those that are mounted flat on the floor of the case. Labels should also be as close to the front of the case as possible. Labels on the back wall of a case or behind a vitrine are impossible for many people to read.

■ **Define labels with color or a raised surface.**

These elements serve as clues to finding the labels for people with low vision. Type silkscreened on walls often goes undiscovered and, thus, unread by people who have low vision.

■ **Mount wall labels at a height that is comfortable for both those seated and standing.**

Wall labels mounted between 1220 mm (48 in.) and 1675 mm (67 in.) are in a comfortable viewing location for both those seated and standing. Wall labels mounted with a centerline at 1370 mm (54 in.) above the floor are at optimum height for everyone (see Fig. 3).

■ **Mount label rails so that the top of the label is at approximately 1015 mm (40 in.) above the floor.**

At this height the labels are low enough for those seated but not too low for people with low vision who are standing. Labels mounted lower, particularly in label wells at 305 mm (12 in.) or less above the floor, require that people who have low vision kneel to be close enough to the type.

■ **Locate labels in consistent locations throughout an exhibition.**

Labels that appear in a different location at each work of art or within each case are difficult to find for people with low vision and people with cognitive disabilities.

■ **Provide sufficient light to read labels.**

For text to be readable by people with low vision, lighting on the label must be between 100 lux and 300 lux (10 footcandles to 30 footcandles). (See Fig. 8.) Light must be at the same level as the light in the area immediately surrounding the label and must be uniform across the label and the rail.

■ **Avoid shadows on labels.**

Shadows from nearby objects or from portions of the exhibit case lower the contrast of type to background. The possibility of shadows should be considered carefully so that text does not become illegible for people with low vision.

IV Audiovisuals and Interactives

A. All exhibition interactives, audio-only programs (e.g. music with lyrics and texts of speeches), and audiovisuals with soundtracks produced by the Smithsonian must be either open or closed captioned.

If an audio presentation not produced by the Smithsonian is shown in the exhibition for *more than three months* it must be open or closed captioned. If an audio presentation not produced by the Smithsonian is shown for *fewer than three months* it may be accompanied by a verbatim script mounted directly next to it. Soundtracks of ambient sounds must be identified whether captioning or a script is used. Sounds may also be identified in label text.

■ **Provide all audio narration in a print format.**

For people who are deaf or hard of hearing to understand presentations with a narrative soundtrack, they need a print translation of the narration. This print can either be open or closed captioning (for a Smithsonian production) or a verbatim transcript (allowable only for non-Smithsonian productions that are shown for fewer than three months in an exhibition space). Audio-only programs require a printed text; ambient soundtracks should be described in a label.

Captioning is, by far, the most effective method of presenting narration in print. It allows people to watch the images and the text simultaneously. A script requires a back-and-forth effort between the screen and the script. It also requires a minimum of 16-point type, visual cuing to scenes and key points, and sufficient lighting for reading. A script is a last-resort solution. ***Open captioning*** translates the audio portion of a video or film program into visible subtitles. Viewing does not require special equipment; the captions are present on the screen at all times. ***Closed captioning*** requires a decoding capability for display on a standard television receiver and can be switched on and off by the visitor on demand.

■ **For non-narrated audio programs, provide visitor-operated volume controls. People who are hard of hearing can hear music at above-average volume.**

Individual volume controls on hand-held audio receivers provide access to music for this audience.

B. Interactives and audiovisuals that do not have soundtracks must carry labels stating that fact to assure deaf and hard-of-hearing people that they are not missing information.

C. Audiovisual programs and computer interactives that present information with images and print must be audio described.

Audio description (audible description of visuals fit into pauses in the soundtrack) presents information about the on-screen images and action to people with visual impairments. Provide audio description either on the general soundtrack or on a separate track accessed at the interactive site (see Fig. 9).

D. Instructions for proper use of interactives must be accessible to all visitors.

Write instructions for interactives in a short-sentence, step-by-step format. People who have difficulty reading (e.g. some people who are deaf or who have certain learning disabilities) can perform the activities if they can get beyond the barrier of complex written instructions (see Fig. 16).

Instructions are more effective for people with cognitive disabilities if participant action is required after each direction rather than after a string of directions. This step-action-step format assists people who have short-term memory problems.

Add ***illustrations and demonstrations*** to support verbal instructions (see Fig. 16). Any support to the reading process can contribute to the interactive's overall effectiveness.

Present written instructions in

- 70% contrast
- sans serif or simple serif type
- type that has a minimum 4.5 mm (3/16 in.) x-height
- lighting at a minimum of 100 lux (10 footcandles)

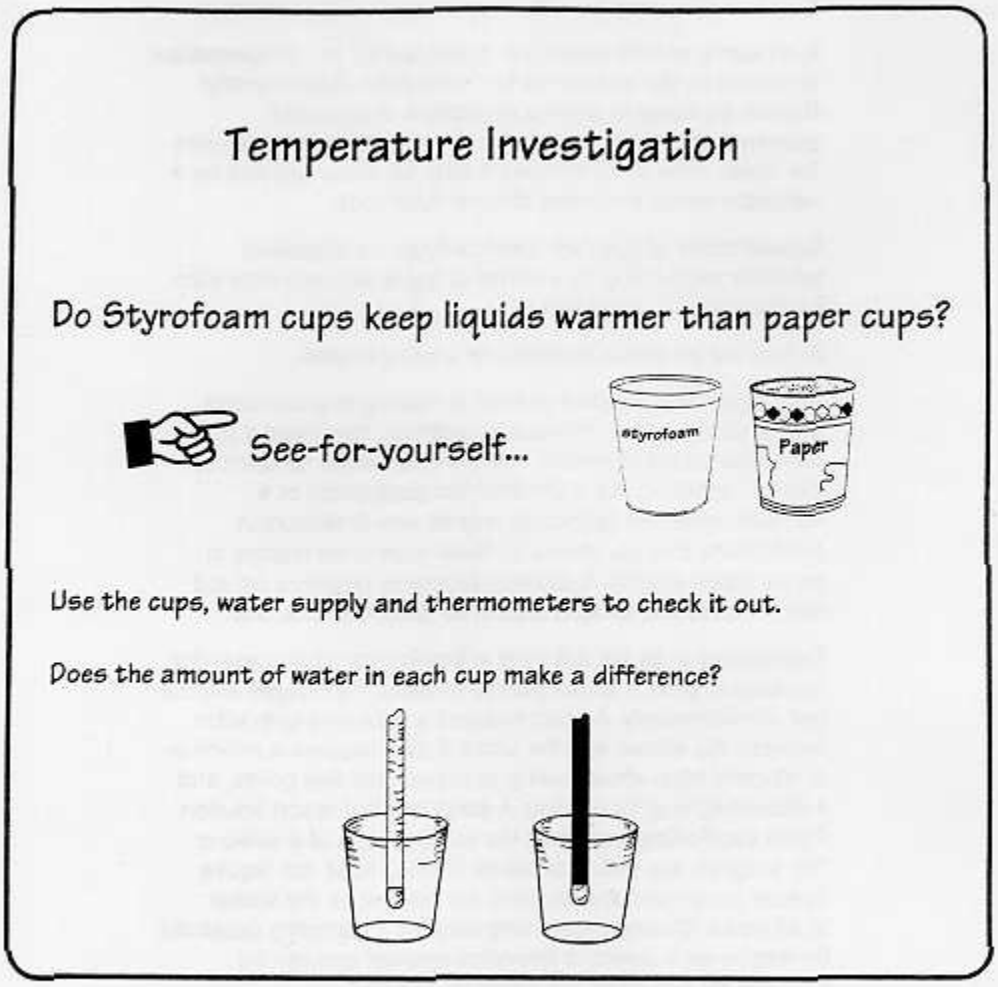

Fig. 16 Illustrations that support verbal instructions contribute to the overall effectiveness of the interactive activity.
Courtesy the Museum of Science, Boston, MA

■ **Present all instructions in both an audio and printed format.**
People who are blind and those who cannot read need instructions presented orally. Those who are deaf or hard of hearing require the instructions in print.

E. Controls for and operation of all interactives must be accessible and usable by all visitors.

■ **Interactives must be within reach range of people who are short or those who use wheelchairs as well as of those who are standing.**

Locate controls (e.g. levers, buttons, track balls) so that they are within reach range of a wheelchair user and unobstructed by shelves or furniture. If the controls are to be used from a *forward approach* in a wheelchair, they can be no higher than 1220 mm (48 in.) and no lower than 380 mm (15 in.) above the floor (see Fig. 17). If the controls are to be used from a *parallel approach,* they can be no higher than 1370 mm (54 in.) and no lower than 230 mm (9 in.) above the floor (see Fig. 18).

NOTE: x ehl)'l bo635 mm (25 in.}; z $hall be.:<: x. Wtto x <510 rMI {20 it\.), thtm y ::;holl bo 1220 m1n (48 in) maximum. When xis 510 lo 635 mm (20 1025 in.), then y ::;haJ 00 1120 mm {44 in.) maxiiTllm.

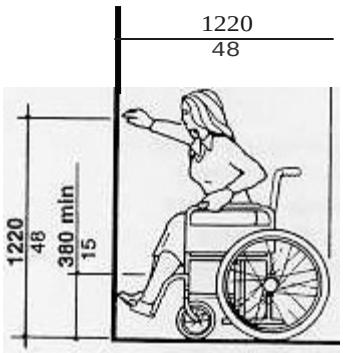

a. High Forward Reach

1220
48

b. Maximum Forward R.each Over an Obstruction

Fig. 17 Forward Reach

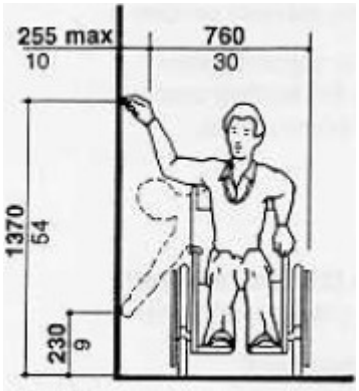

a. High and Low Side Reach Umits

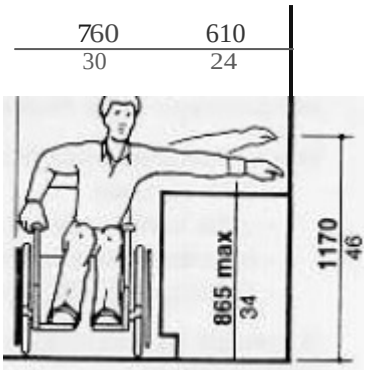

b. Maximum Side Reach Over an ObstrucUon

Fi g. 18 Side Reach

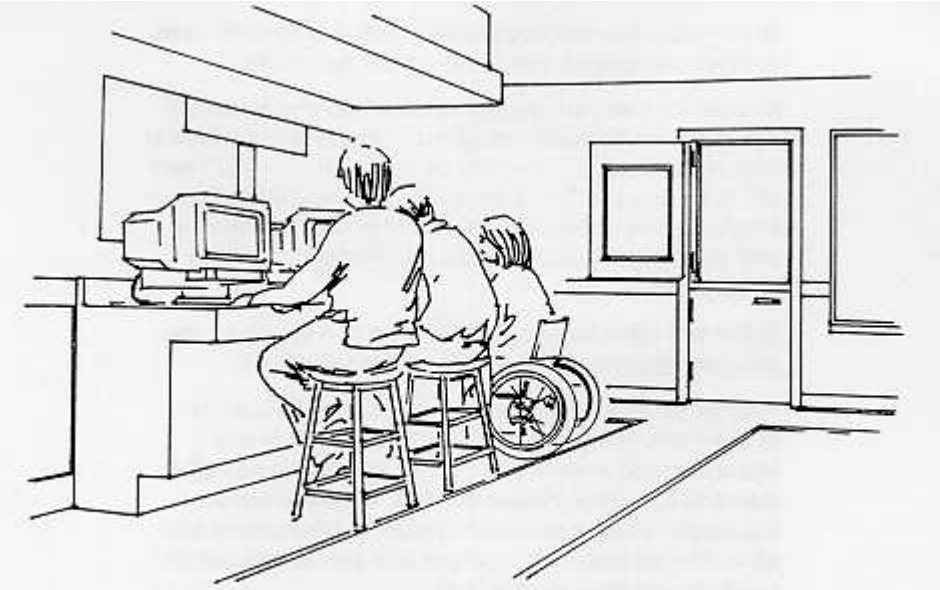

Fig. 19 Providing work stations with seating minimizes the differences between seated and standing visitors

Some people who use wheelchairs cannot extend their arms to full length and cannot use interactives from a side approach. *Front-reach range* height at a maximum of 1220 mm (48 in.) above the floor is preferred (see Fig. 17a).

Some people who are of short stature may not be able to reach controls above 915 mm (36 in.) above the floor.

■ **Lower the reach height for controls that must be located over obstacles.**

To accommodate forward reach over a table top of between 510 mm to 635 mm (20 in. to 25 in.), the maximum reach height should be 1120 mm (44 in.) above the floor. (See Fig. 17b.)

If a person using a wheelchair must make a side reach over an obstacle (of a maximum 610 mm [24 in.] depth and 865 mm [34 in.] height) to use a control, the controls can be no higher than 1170 mm (46 in.) above the floor to be usable (see Fig. 18b).

■ **Eliminate glare on the interactive's instructional surfaces.**

Glare on surfaces such as a monitor screen or a plexiglass protective panel obscures viewing of the audiovisual's images and instructions for people with low vision.

■ **Eliminate reflection and glare for those who are seated or short as well as for those who are standing.**

When working to redirect the negative effects of lights, it is important to consider such effects from the perspective of people who are short or seated.

■ **Provide tactile characters and Braille on or directly below the controls to indicate the function of the controls unless they form a standard computer keyboard (i.e. in QWERTY format).**

Blind people and some people with low vision need tactile characters (at a 70% color contrast against their background) or Braille to identify the location and function of various controls. People with some residual vision need the markings to be in colors contrasting to the controls. A QWERTY format keyboard (where the first keys of the top line of letters are Q-W-E-R-T-Y) is universally understood and may not need additional markings.

■ **Provide touch-sensitive areas in predictable locations (e.g. on all of the four corners of the screen).**

People with visual impairments or cognitive disabilities need touch screen programs that have touch areas where they can find them. This eliminates the need to run one's hand across the screen to locate the touch area, or to have to reorient oneself repeatedly to touch areas on each new screen.

■ **Provide touch-sensitive areas that are at least 75 mm (3 in.) in diameter.**

Small touch areas require fine muscle control. If areas are too small, people with cerebral palsy or other mobility impairments often activate unwanted areas instead of or in addition to those selected.

■ **For activities that require speaking into a specific area, provide equipment that is adjustable for height.**

In order for a wheelchair user or someone who is short to use them, manipulatives requiring a person to speak directly into them can be no higher than 1015 mm (40 in.) above the floor. If the devices are adjustable in height, people in wheelchairs who sit at different heights and people who are tall and cannot bend can use them equally well.

■ **For activities that require listening at a specific area, provide equipment that is adjustable for height.**

In order for a wheelchair user or someone who is short to use them, manipulatives requiring a person to place his ear next to the object to listen can be no higher than 1017 mm (40 in.) above the floor. If the devices are adjustable in height, people in wheelchairs who sit at different heights and people who are tall and cannot bend can use them equally well.

■ **For activities that require viewing in a specific area, provide equipment that is adjustable for height.**

In order for a wheelchair user or someone who is short to use them, manipulatives requiring a person to look into a specified area (e.g. a microscope) can be no higher than 915 mm (36 in.) above the floor. If the devices are adjustable in height and angle, people in wheelchairs who sit at different heights and people who are tall and cannot bend can use them equally well.

■ **Prevent sound from overlapping between interactive areas.**

Some people who are hard of hearing or have difficulty filtering a lot of stimuli cannot separate foreground from background noise. For that reason, it is important that there is little overlap of sound from different sources at any one point in an exhibition. Good acoustical environments are essential.

■ **Interactive elements must be operable by people who have limited muscle and hand control and by those who have only one hand. For controls and operating mechanisms to be accessible, these devices must**

- be fully operable with only one hand
- require no tight grasping, pinching, or twisting of the wrist (e.g. lever handles)
- require no more than 5 lbs. of force to operate
- be at least 75 mm (3 in.) in their smallest dimension
- be covered with non-slip surfaces (e.g. rubber or ridges on a trackball)

■ **Provide a place to rest one's hand while using the controls.**

Some people may need additional support for hands or arms (e.g. table extension or wrist rests) in order to use controls effectively.

F. Use of interactives must be from a location accessible to people using wheelchairs or other assistive devices (e.g. canes, crutches); interactives must not be blocked by furniture or other obstacles.

■ **Locate the interactive so that everyone can get to it.**

For the interactive to be accessible, it must be on an accessible route that meets all of the requirements of the ***Smithsonian Guidelines for Accessible Design*** for Facilities and Sites.

■ **Provide sufficient space at and around the interactive so that everyone can use it.**

The minimum clear floor space required by a wheelchair is 760 mm (30 in.) wide by 1220 mm (48 in.) long (see Fig. 21). Therefore, a space at least that size that overlaps the accessible route is necessary in order for a wheelchair user to work at an interactive.

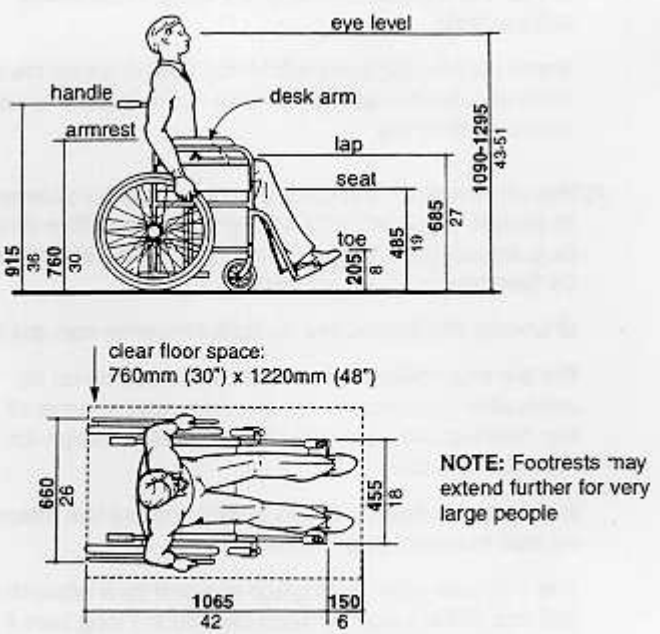

Fig. 21 Dimensions of Adult-size Wheelchairs

Unless the activity requires only minimal interaction by the participant, that floor space must adjoin the interactive in a way that allows forward (not side) access to the activity.

In order for the space to be usable, no more than 485 mm (19 in.) of the clear space (760 mm [30 in.] by 1220 mm [48 in.]) is under the table.

To work at a station, a wheelchair user must have knee space at the interactive of at least 685 (27 in.) high by 760 mm (30 in.) wide by 485 mm (19 in.) deep.

To work at a station, a wheelchair user must have the top of the work surface at between 710 mm (28 in.) and 865 mm (34 in.) above the floor.

To make a 180 degree turn out of a station area, a wheelchair user must have either a minimum 1525-mm (60-in.) turning diameter or a 915-mm (36-in.) T-shaped area (see Fig 20).

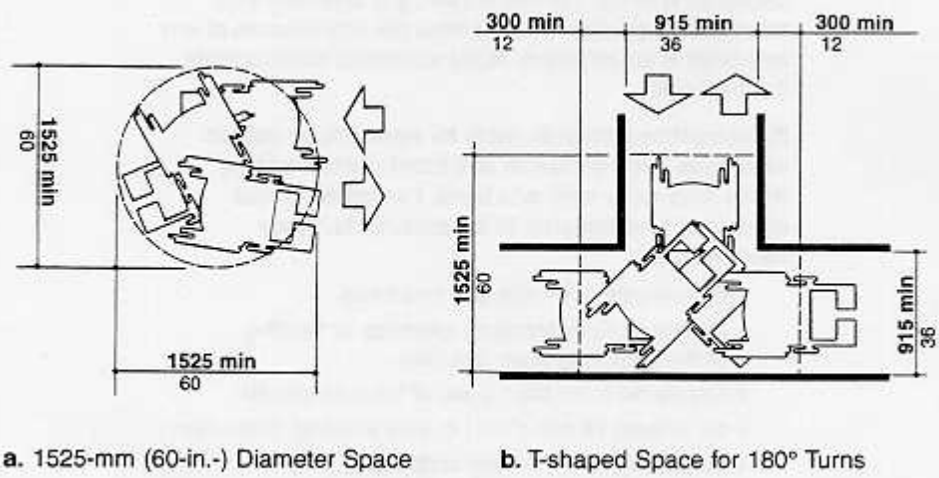

a. 1525-mm (60-in.-) Diameter Space **b.** T-shaped Space for 180° Turns

Fig. 20 Wheelchair Turning Space

III Circulation Route

A. **The circulation route within the exhibition must be accessible according to the requirements of the *Smithsonian Guidelines for Accessible Design for Facilities and Sites.***

■ **Create an accessible route with the following characteristics:**

To be accessible to people using wheelchairs and other mobility-oriented assistive devices, the circulation route must be at least 915 mm (36 in.) wide for one-way traffic (Fig. 22). For two-way routes, the minimum width is 1525 mm (60 in.) (Fig. 23). It is recommended that even one-way traffic routes be a minimum of 1525 mm (60 in.) to allow wheelchair users to stop to look at cases without blocking the route.

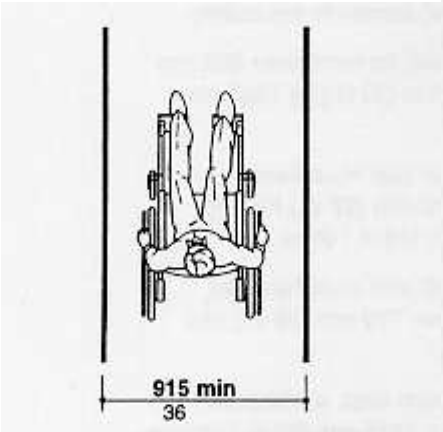

Fig. 22 Minimum Clear Width for Single Wheelchair

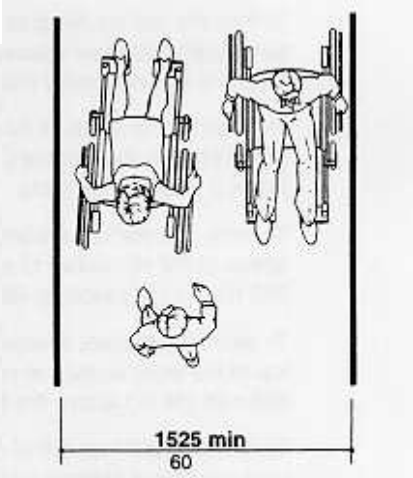

Fig. 23 Minimum Clear Width for Two Wheelchairs

All entrances, gates, and doors must meet accessibility requirements (e.g. width, hardware, opening force, thresholds).

A wheelchair user's clear floor space is approximately 760 mm (30 in.) by 1220 mm (48 in.) (see Fig. 21). At least this amount of floor space is necessary on all viewing sides of exhibit cases and vitrines.

People need to be able to get to the viewing space from the circulation route. Therefore, this clear floor space must overlap the accessible circulation route through the exhibition space.

If a person in a wheelchair must make a turn around an obstruction, the minimum clear width of the accessible route shall be as shown in Fig. 24. Where the circulation route makes a U-turn around an object that is less than 1220 mm (48 in.) wide, the pathway width increases to at least 1065 mm (42 in.) on the approach and 1220 mm (48 in.) in the turn (see Fig. 24b).

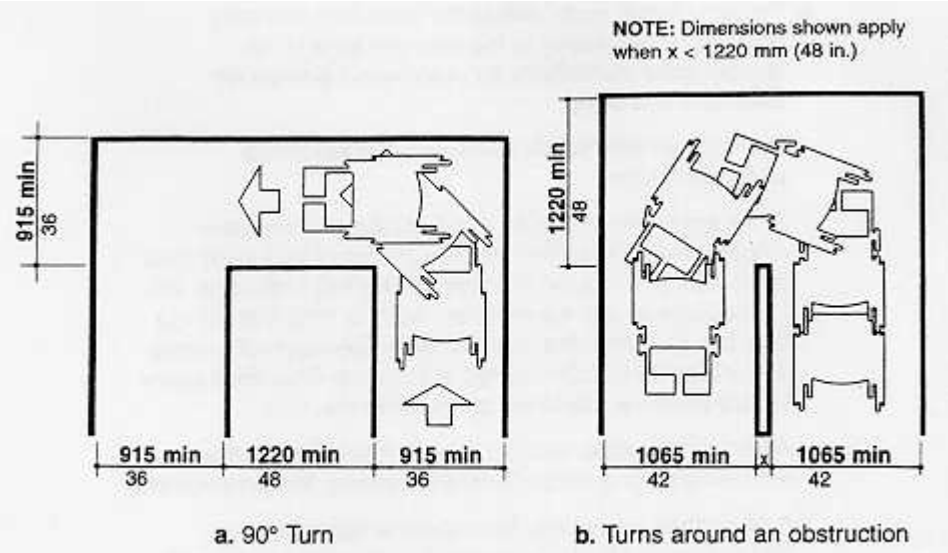

Fig. 24 Width of Accessible Route

Where the circulation route branches off to allow viewing of cases or objects, the end of the branch provides either a minimum 1525-mm- (60-in.-) diameter circle or a 915-mm (36-in.) T-shaped turning space (see Fig. 20).

People in wheelchairs should not have to back up out of spaces more than 915 mm (36 in.) deep, particularly crowded ones. The circle or T-shape allows someone using a wheelchair the necessary turning space to return easily to the circulation route.

If the circulation route is less than 1525 mm (60 in.) wide, there should be passing spaces at least 1525 mm (60 in.) wide and 1525 mm (60 in.) long at reasonable intervals not exceeding 61 m (200 ft.).

OR

If the circulation route is less than 1525 mm (60 in.) wide, there are T-shaped intersections of two pathways--each a minimum of 915 mm (36 in.) wide--within reasonable intervals not exceeding 61 m (200 ft.).

Clear floor spaces (approximately 760 mm [30 in.] by 1220 mm [48 in.]) should be planned to allow a person using a wheelchair to either move parallel to the case and then proceed in a forward motion or to move perpendicular to a case and then back away easily.

Cases and vitrines should be positioned to avoid dead ends at walls. When this is impossible, a minimum 1525-mm- (60-in.-) diameter turnaround space must be allowed at the end. (See Fig. 20.)

There must be at least 2030 mm (80 in.) of clear head room along the circulation route. Obstacles to be avoided include overhanging works of art, exhibit props, ceiling-mounted signs, plants, and low space under escalators. (See Fig. 25.)

If the head room is less than 2030 mm (80 in.) in a space next to the circulation route, there is a cane-detectable barrier within 685 mm (27 in.) of the ground. This maximum height for the barrier gives someone who has low vision and using a cane the time to stop before his body hits that overhead object.

A cane-detectable barrier can be double guardrails, large potted plants, or other solid surfaces (see Fig. 5). Stanchions with a single woven strip or a velvet rope between vertical posts are not acceptable because the horizontal barrier is above 685 mm (27 in.) and the vertical posts are too far apart to be detected in a cane sweep.

Fig. 5 Protruding Object Warning

Changes in surface texture (i.e. detectable warnings) are useful for alerting people to upcoming barriers when used in the context of an established, consistent warning system. However, they do not give sufficient warning for barriers overhead. A person using a cane will detect the change and slow his forward movement to determine the message it gives. If the cane detects

nothing on the ground, the person will proceed and still hit his head on the object above. Also, dog guides do not interpret texture changes. They will proceed forward, and their masters will bump into the objects above.

If objects mounted on the wall parallel to the pathway have bottom edges between 685 mm (27 in.) and 2030 mm (80 in.) from the floor, they must project less than 100 mm (4 in.) into the pathway. Wall-mounted objects with bottom edges below 685 mm (27 in.) may project any amount so long as they do not reduce the required minimum clear width of the circulation route (915 mm [36 in.]). This includes wall-mounted cases, wall-mounted signage that is installed perpendicular to the wall, video monitors, and other equipment that is cantilevered from the wall.

Objects on the floor that rise less than 305 mm (12 in.), are tripping hazards. The problem worsens if the object's color does not contrast with the floor or if the lighting is poor.

The circulation route surface must be stable, firm, and slip-resistant.

The slope of the circulation route must be no more than 5%. If the slope exceeds 5%, then it becomes a ramp and must meet requirements for a ramp. (See ramps in the ***Smithsonian Guidelines for Accessible Design for Facilities and Sites***.)

Any cross slope (a slope that is perpendicular to the path of travel) of the circulation route must be no more than 2%.

When circulation route levels change, the vertical difference must be less than 6.5 mm (1/4 in.). When there is a change in level of between 6.5 mm (1/4 in.) and 13 mm (1/2 in.), the edge must be beveled with a slope of 1:2. Any change greater than 13 mm (1/2 in.) must be ramped. (See Fig. 28.)

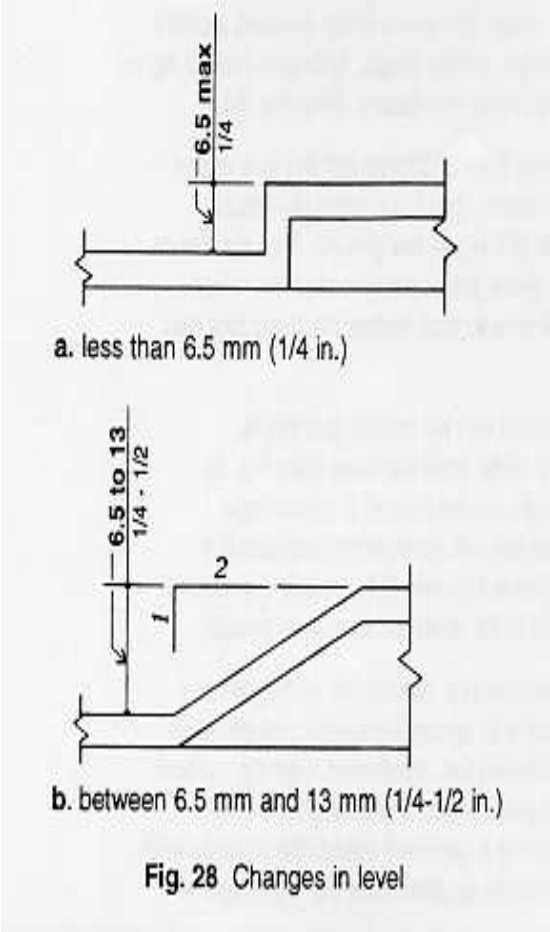

Fig. 28 Changes in level

The circulation route must be free of steps and stairs or include ramps or elevators adjacent to those steps and stairs. Ramps and elevators must meet the Smithsonian Guidelines for Accessible Design for Facilities and Sites accessibility requirements.

If carpet or carpet tile is used on the floor, it must be securely attached.

Carpet must have a level, low pile and a firm pad or no pad at all underneath it (maximum pile thickness is 13 mm [1/2 in.]).

Artificial carpet surfaces and some natural surfaces (e.g. "astroturf," exterior rubber mats used to clean shoes, and cocoa mat) are extremely difficult for wheelchair users. Such surfaces cause the wheelchair wheels to pull to one side or to sink into the surface.

B. The circulation route must be clearly defined, well lighted, and easy to follow.

■ **Provide sufficient lighting on circulation routes.**
A minimum of 50 to 100 lux (5 to 10 footcandles) of quality light on the circulation route is necessary for people with visual and perceptual difficulties to negotiate the path.

■ **Provide nonverbal wayfinding assistance along the circulation route.**

Color coding, changes in surface texture, symbols or other nonverbal techniques assist people with cognitive disabilities in finding their way through complex environments. Color contrast (of 70%) between carpet path and edge is also an effective way to define paths for people with low vision or cognitive disabilities.

■ **Visually define the walls, floors, and pedestals.**

Some people with low vision have difficulty with depth perception. Color contrast (70%) and directed lighting can differentiate horizontal from vertical surfaces on paths.

■ **Design areas so that floor surfaces at and around accessible seating areas are level, stable, firm, and slip-resistant.**

■ **Provide an accessible floorplan to aid visitors in wayfinding.**

A floorplan that meets requirements for accessible printed and raised-line materials can assist people with visual impairments and cognitive disabilities to plan travel through complex exhibitions. These should be available at entries to exhibitions, information desks, and/or other central locations.

■ **Provide more than one exit from an exhibition.**

Mid-point exits from exhibitions (particularly large exhibitions) assist those who become tired, confused, or overwhelmed when in an exhibition.

IV Furniture

A. All cases must provide viewing access to people who are short or seated as well as to those who are standing.

■ Design cases and pedestals so they display objects within viewing distance of people who are short, seated, or standing. (See Exhibition Items section.)

■ Design cases and vitrines so they are as shallow as possible, allowing all visitors to see objects up close and from above. (See "Exhibition Items" section.)

B. Cases and vitrines must not present a safety hazard to any visitor.

■ Design wall-mounted cases so that their lower edges are at or below 685 mm (27 in.) above the floor.

This height allows a cane-detectable barrier for people with visual impairments (see Fig. 26). If the lower edge is maintained at 685 mm (27 in.), it also provides knee clearance for a wheelchair user who wants to move close to a case. Depending on the size of the case, a cane-detectable platform that matches the footprint of the case may work if placed on the floor directly below. This will, however, eliminate knee clearance for wheelchair users.

■ Long, horizontal cases that have legs only at the four corners (more than 305 mm [12 in.] apart) should be designed so they have a cane-detectable barrier at no higher than 685 mm (27 in.) above the floor.

A cane user will detect objects within a sweep that extends approximately 150 mm (6 in.) to either side of his shoulders (see Fig. 27). Therefore, cases that are, for example, 1830 mm (72 in.) long with a lower edge higher than 685 mm (27 in.) could easily be hit at midsection by a person's body. Horizontal supports may provide a cane-detectable barrier.

A cane user will detect objects within a sweep that extends approximately 150 mm (6 in.) to either side of his shoulders.

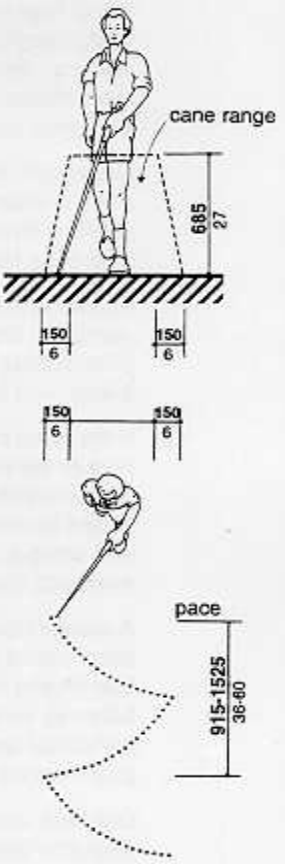

Fig. 27 Cane Technique

■ **Maintain a predictable border on both sides of circulation routes.**

Cases that jut unpredictably into routes--especially if the cases are not well lighted and have little color contrast to the floor and walls--are very dangerous to people with low vision. This problem is heightened if the cases have sharp angles, corners, or edges.

Fig. 29 Table case height

■ **Design cases so they are distinguishable from wall openings.**

Floor-to-ceiling wall cases, with glass fronts of 1830 mm (72 in.) or more in height, can be mistaken for wall openings by people with low vision. Good case lighting, clearly defined case edges, and floors of a different material and color than the floor outside the case limit this problem.

■ **Design vitrines and plexiglass barriers so they are easily detectable.**

Plexiglass and glass case tops or half-plexiglass walls in front of objects can go undetected by people with low vision. Edges and corners must be rounded. An edging of another material or even a tint at the seams and edges aids detection.

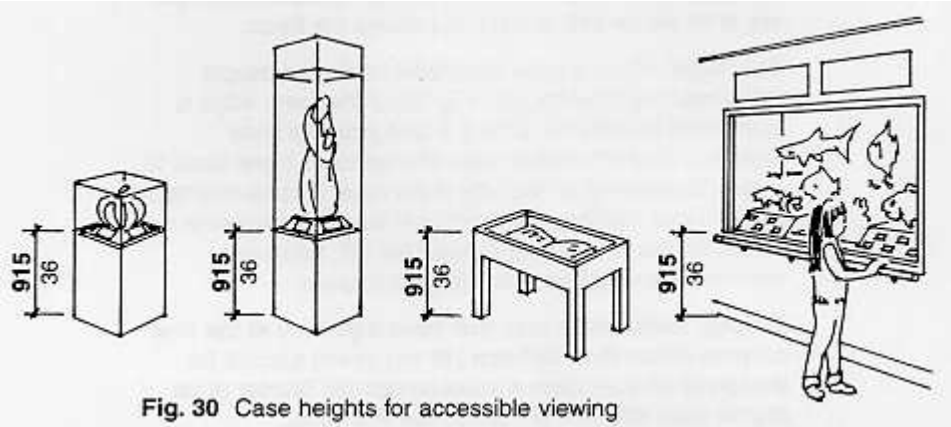

Fig. 30 Case heights for accessible viewing

C. Seating must be provided in each exhibition. 50% of the seats must be accessible. Single-gallery exhibitions must have seating nearby, in a corridor or in an adjacent gallery space.

■ **Provide accessible seating in gallery spaces.**

For seating to be accessible, seats should be firm and between 430 mm (17 in.) and 510 mm (19 in.) above the floor. Chairs or benches should have both arm and back support. This support is essential for people who have mobility impairments: arms and backs offer people support points when lowering themselves into as well as when rising out of seats. Seat backs should be firm and have an upper edge of no less than 455 mm (18 in.) above the seat; arm heights should be roughly proportionate to the back heights.

■ **Provide seats that are not tripping hazards or obstacles.**

For people with low vision, seating is best located where it is not a tripping hazard and where it is clearly visible due to color contrast and good lighting. Benches should not be placed under text on walls. This presents an obstacle and a potential hazard to people who must get very close to text to read.

Seating cannot be a barrier to people with mobility impairments. It must not block passage between areas or block the clear floor space needed to operate controls or to use equipment.

Example: A bench cannot be placed near the latch side of door openings where people position themselves in order to open doors), below elevator buttons, or near water fountains.

■ **Provide seating that can be used by people who use wheelchairs as well as by their companions.**
Benches and fixed seating need at one end a minimum 760 mm (30 in.) by 1220 mm (48 in.) space to allow a person in a wheelchair to sit next to someone on the bench (see Fig. 31) or to transfer onto the seating itself.

Fig. 31 Seating

VII Color

A. Gallery colors (floors, walls, furniture) must create an environment that is clearly articulated, comfortable, and safe.

■ Choose colors so that floors are visually separated from the walls and furniture.

People with low vision and visual perceptual difficulties require at least a 70% contrast in colors to negotiate a space. If the walls, floor, pedestals, and benches are all basically the same hue, all pieces of the room blend together. At minimum, contrasting baseboard strips are necessary. For floors and furniture, shadows from toekicks and glare off of metal legs provide some assistance in detection. However, furniture that is seen primarily from above (e.g. benches) will still blend with the floors unless the color contrasts.

■ Select light gallery colors if object conservation requires low lighting.

Dark wall and floor colors absorb light. If a gallery requires low lighting for conservation reasons, the gallery colors should compensate by being light. This will counteract the low-light effects on negotiating the circulation route, seeing the objects, and reading the labels.

■ Design well-lighted spaces with limited imagery and few objects in several places within an exhibition.

A lack of solid background in exhibit spaces forces people reading sign language to sort sign movements out of busy surroundings. This quickly becomes tiring on the reader's eyes. Well-lighted, visually quiet areas serve as respite stations for sign language tours and conversations.

B. The colors and patterns of exhibition floor surfaces must give accurate information about the depth, height, and condition of the floor surface.

■ Avoid patterned carpets and floor tiles on uneven surfaces and in low-lit areas.

Highly patterned coverings misinform people with low vision about changing heights of the surface. This is a particular problem when the pattern is combined with pools of light and shadow or with high polish and glare. Dark colors and

shadows are read as sunken; light colors and pools of light are read as raised; glare and sheen are read as wet. At minimum, more and even lighting should be provided in a gallery where patterned floors are a pre-existing condition.

C. Colors within cases must provide clear visual access to items inside.

■ **Select background colors that contrast with the items in a case.** (See "Exhibition Items" section.)

D. Colors for labels must have a high contrast between text and background.

■ **Select label color combinations that provide sufficient contrast between print and background.** (See "Label Design and Text" section.)

VIII Lighting

A. The safety of visitors (particularly those with low vision and visual perceptual difficulties) must receive equal consideration with conservation issues and exhibition design issues.

For a chart of accessible light levels see Fig. 8.

B. Light and color must combine to produce a clearly delineated circulation route into, through, and out of every exhibition space. This is a particular requirement whenever there are changes in level or unexpected turns or obstacles in the route.

■ **Limit changes in light level within a gallery and between galleries.** When they must occur, stepping light levels up or down should be gradual. The eyes of people with low vision adjust more slowly than those without impairment. Spotlighted objects in darkened galleries or dark galleries contiguous with brightly lighted galleries are very difficult to negotiate.

■ **Provide sufficient light on the circulation route.**

People with low vision need at minimum 100 lux (10 footcandles) of light to negotiate a clear path that has good color contrast and no obstacles.

■ **Avoid creating pools of light and shadow that create false impressions of depth and height on floor surfaces.** (See "Color" section.)

C. There must be sufficient light on objects to make them visible to all visitors unless the light level will do substantial damage to the objects.

■ **Provide sufficient light on the objects.** (See "Exhibition Items" section.)

D. There must be sufficient light on labels to make them readable by all visitors. (See "Label Design and Text" section.)

■ **Avoid shadows on label text or objects.** (See "Exhibition Items" and Label Design and Text sections.)

E. The elimination of glare from cases must be considered for those visitors who are seated as well as for who are those standing.

F. Sufficient light to accommodate speechreading and sign language conversation must be provided in locations throughout the exhibition space.

- **Provide even, high-quality light in selected areas of galleries.**

People who speechread or read sign language need good light to complete the task without eye strain. At least a 100 lux (10 footcandles) level of light between the speaker and receiver is needed. (See "Color" section.)

IX Public Programming Spaces

A. In places of assembly with fixed seating, there must be a number of wheelchair locations provided in compliance with the requirements of the *Smithsonian Guidelines for Accessible Design for Facilities and Sites*. These locations must be dispersed throughout the seating area.

■ **Provide seating areas that are accessible to people using wheelchairs.**

The requirements for wheelchair locations, as set by the Smithsonian Guidelines for Accessible Design for Facilities and Sites, are as follows:

Capacity of Overall Seating	No. of Wheelchair Spaces
4-25	1
26-50	2
51-75	3
76-100	4
101-150	5
151-200	6
200-300	7
301-400	8
401-500	9
501-1000	2% of total
over 1000	20, plus 1 for ea. add'l. 100

■ **Locate spaces for wheelchair users so that they adjoin, but do not block, an accessible route that also serves as a means of egress in an emergency.**

■ **Disperse seating for wheelchair users throughout the space.**

People using wheelchairs do not always want to sit at the very back or the very front of a public programming space; it is uncomfortable, psychologically isolating, and, if in front, obstructive in that it blocks the view of others. Spaces for people using wheelchairs must be an integral part of the seating plan and must always be near fixed seating. (See Fig. 32.)

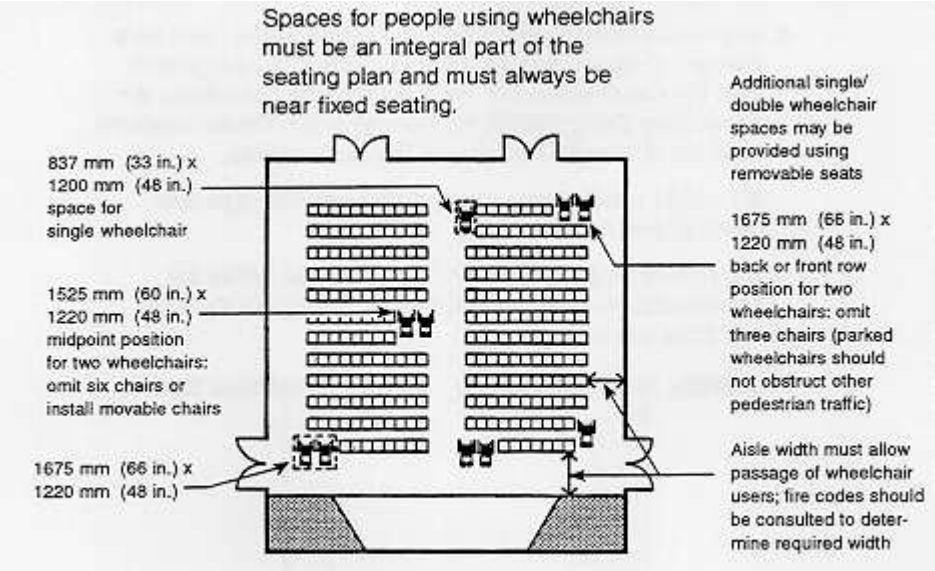

Fig 32 Wheelchair seating dispersed throughout seating area
Source: UFAS Retrofit Manual

- **Spaces for wheelchair users can be filled temporarily by removable chairs when not needed by people with disabilities.**

However, those removable seats must be easily removable, preferably by the person using a wheelchair. Removable seats can be fixed seats that swing aside or they can be portable, folding chairs.

- **Design areas so that floor surfaces at and around accessible seating areas are level, stable, firm, and slip-resistant.**

- **If a person enters the wheelchair location from the side, the spaces must be at least 1525 mm (60 in.) long. (See Fig. 33b.)**

- **If a person using a wheelchair enters the space from the front or back, the spaces are at least 1220 mm (48 in.) long. (See Fig. 33a.)**

- **The width of a space for one wheelchair user is at least 760 mm (30 in.). Space required for two wheelchair users together is at least 1675 mm (66 in.) wide. (See Fig. 33.) One such pairing is desirable; however, there is no requirement that spaces for wheelchair users be paired.**

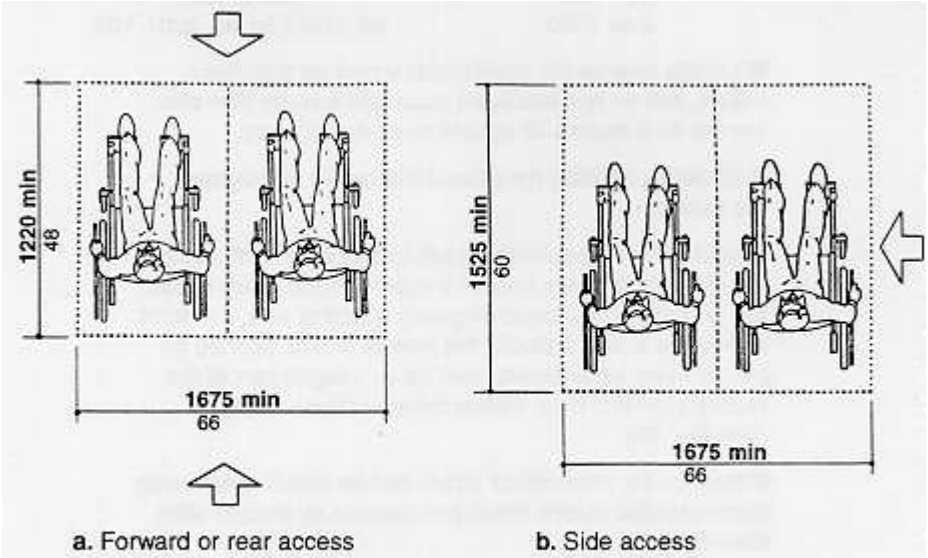

Fig. 33 Space requirements for wheelchair seating spaces in series

B. **If seating is in the form of benches, the same number of benches with arm and back support as wheelchair locations required in the *Smithsonian Guidelines for Accessible Design for Facilities and Sites* must be provided.**

C. **Where there is fixed seating, there must also be aisle seats (one percent of the total number, with no fewer than one) that have no armrests, swing-away armrests, or removable armrests. These seats must be dispersed throughout the programming space.**

D. **Each seat without an armrest or with a removable or swing- away armrest must be identified on the armrest by the international symbol of access.** (See Appendix, "Access Symbols".)

Signs notifying patrons of the existence of these chairs must also be posted at the entrance to the space. These signs must meet the requirements of the *Smithsonian Guidelines for Accessible Design for Facilities* and Sites.

E. **Stages, dressing rooms, and other areas for performers associated with public programming areas must be accessible, according to the requirements of the *Smithsonian Guidelines for Accessible Design for Facilities and Sites*.**

Provide an accessible route to all performance areas, including stages (from both front and back stage, if applicable), dressing rooms, and other spaces used by performers.

■ **Design all stages, dressing rooms, and spaces used by performers so they are fully accessible according to the standards of the Smithsonian Guidelines for Accessible Design for Facilities and Sites.**

F. Assistive listening systems must be provided in all public programming spaces.

■ **Provide a permanent assistive listening system if the area seats 50 or more people or, if the number is smaller, either a permanent or a portable assistive listening system may be provided.**

■ **Provide assistive listening receivers in number equal to 4% of the total number of seats (but no fewer than two receivers).**

■ **Provide signs indicating the availability of the assistive listening system and the procedure for borrowing receivers. The signs must meet accessibility requirements. (See *Smithsonian Guidelines for Accessible Design for Facilities and Sites*.)**

G. If the programming space is always kept dark, assistive devices (e.g. handrails, strip lighting) must be available to make accessible the route in, through, and out of the space.

■ **Design handrails and lighting so that they assist people in finding and following the route into and through a darkened program area.**

Handrails and lighting should start outside the entrance--where it is still light--and continue into and through the space, and then all the way back out to the exit.

H. Seating color and material choice must make seats visually accessible to everyone.

■ **Design the space so that seating does not become a tripping or bumping hazard.**

Low light, lack of contrast, step-up seats and unpredictable rows of seats make public programming spaces difficult for those with low vision. Seating in public programming space should not be covered by the same carpeting that is on the floor. Rather, the seats should be made of a material that contrasts in color and texture to the floor and surrounding walls. Seats should be arranged in a configuration that presents predictable row beginnings and ends.

Lighting or lights on the ends of rows of seats or benches assists in locating the seating.

X Emergency Egress

A. There must be fully accessible emergency egress from the exhibition spaces. Provide as many accessible emergency exits from an exhibition space as the number of fire exits required by the National Fire Protection Association's Life Safety Code (NFPA 101).

■ **Provide areas of rescue assistance if the number of accessible exits is insufficient.**

Areas of rescue assistance are described in the Smithsonian Guidelines for Accessible Design for Facilities and Sites. They are safe waiting areas for people who cannot leave the building by using stairs. Areas of rescue assistance are equipped with intercom systems connected directly to the fire control area, allowing a waiting person to inform firefighters of his whereabouts and to receive instructions for safety.

■ **Plan for emergency egress from areas where lifts have been used for access.**

The lifts should be connected to emergency power and should be usable during fire emergencies.

B. Design the exits from the exhibition to either lead back to the accessible entry route or to lead directly to another accessible egress route.

C. Notification about locations of accessible egress from the gallery must be available at key points in the museum.

■ **Provide signs with the international symbol of access (see Appendix "Access Symbols") at accessible emergency exits. Inaccessible exits are required to provide directions to those that are accessible or to areas of rescue assistance.**

Emergency exit signs must meet the requirements of the ***Smithsonian Guidelines for Accessible Design for Facilities and Sites***.

■ **Make available at key points within the museum an exhibition floorplan that meets accessibility requirements for printed materials.** (See Appendix, Printed Materials)

Accessible egress routes should be clearly marked. This can assist someone before the emergency happens. Visitors can use the plan to familiarize

themselves with the exhibition layout as well as with how to get into and out of it quickly.

D. Both visual and audible fire alarm systems must be provided.

■ **Install visual as well as audible fire alarms to the standards of the *Smithsonian Guidelines for Accessible Design for Facilities and Sites*.**

Visual alarms are designed to inform people who are deaf or hard of hearing of the need to evacuate a building.

While it is important to have sufficient coverage by visual alarms, it is also important to avoid having too much coverage. The required flash rate for visual alarms is limited to between 1Hz and 3Hz. This is because flashing lights at approximately 5Hz can trigger seizures in people who are photosensitive. It is critical that there are not too many visual alarms in one area (unless they are synchronized) because they do not flash simultaneously and can together exceed the maximum allowable flashes per second.

X Children’s Environment

E. Areas designed specifically for children must meet the children's accessibility recommendations of the Architectural and Transportation Barriers Compliance Board.

- **Provide accessible routes meeting all standards and children's requirements into, through, and out of all spaces.**

- **Provide a circulation route that is at least 1118 mm (44 in.) wide for travel in a single direction.**

Children are generally less adept at travel in a straight line than are adults. Therefore, children's environments require a wider circulation route.

- **Provide a circulation route that is at least 2235 mm (88 in.) wide for passage by two wheelchair users.**

- **Provide passing spaces of at least 1879 mm (74 in.) wide at no more than 30 m (100 ft.) apart.**

- **Select carpets that have a maximum pile height of 6 mm (1/4 in.).**

- **Design interactives so they are usable from a forward approach with a maximum high reach of 915 mm (36 in.) and a maximum low reach of 508 mm (20 in.).**

- **Design interactives so they are usable from a side approach with a maximum high reach of 915 mm (36 in.) and maximum low reach of 508 mm (20 in.).**

- **Design wall-mounted cases and other protrusions of 100 mm (4 in.) or deeper so their lower edges extend to the floor.**

- **Design wall protrusions of more than 25 mm (1 in.) deep and of a height less that 760 mm (30 in.) so they extend all the way to the floor.**

- **Design cane-detectable barriers for overhead hazards to be no higher than 305 mm (12 in.) above the floor.**

■ **Design seating for children with backs and arm support and with seats at the following heights:**

Pre-kindergarten	203 mm to 305 mm (8 to 12 in.)
Kindergarten and older	305 mm to 432 mm (12 to 17 in.)

■ **Provide tables, counters, and work surfaces with clear knee space 610 mm (24 in.) high, 610 mm (24 in.) deep, and 760 mm (30 in.) wide. Wherever possible, provide adjustable-height work surfaces.**

■ **Design cases, text, and mount labels to accommodate a child wheelchair user's eye level.**

A 6-to-9 year old wheelchair user's eye level is approximately 1036 mm (41 in.) above the floor.

■ **Mount directional signage at no higher than 1219 mm (48 in.) above the floor.**

Directional signs must meet the requirements of the ***Smithsonian Guidelines for Accessible Facilities and Sites*** (using the mounting height for children as stated above).

Section C

Resources

Information and Services Resources

The following is a partial listing of accessibility-related information resources and vendors. The Smithsonian Accessibility Program offers these listings as suggestions only and does not necessarily endorse these products and services. (Current as of 1996, update in progress.)

Telephone codes are as follows:

(V) = Voice
(T) = TTY
(V) and (T) = Voice and TTY
(Fax) = Facsimile Machine
(Modem) = Modem

Information Resources

For People Who Are Blind or Have Low Vision

American Council of the Blind
1155 15th St., N.W., Suite 720
Washington, DC 20005-2706
202-467-5081 (V)

American Foundation for the Blind
11 Penn Plaza, Suite 300
New York, NY 10001-2018
212-502-7600 (V)

American Printing House for the Blind
P.O. Box 6085
Louisville, KY 40206
502-895-2405 (V)

American Services for the Blind
919 Walnut St.
Philadelphia, PA 19107
215-627-0600 (V)

Association for Education and Rehabilitation of the Blind and Visually Impaired
206 North Washington St., Suite 320
Alexandria, VA 22314
703-548-1884 (V)

Carroll Center for the Blind
770 Centre St.
Newton, MA 02158-2597
617-969-6200 (V)

Hadley School for the Blind
700 Elm St.
Winnetka, IL 60093
847-446-8111 (V)

Helen Keller National Center for Deaf-Blind
Youth and Adults
111 Middle Neck Rd.
Sands Point, NY 11050
516-944-8900 (V and T)

National Association for the Visually Handicapped
22 West 21st St.
New York, NY 10010
212-889-3141 (V)
212-727-2931 (Fax)

National Federation of the Blind
National Center for the Blind
180 Johnson St.
Baltimore, MD 21230
410-659-9314 (V)

National Society to Prevent Blindness
500 East Remington Rd.
Schaumburg, IL 60617
1-800-221-3004 (V)

Perkins School for the Blind
175 North Beacon St.
Watertown, MA 02172
617-924-3434 (V)
617-926-2027 (Fax)

Prevent Blindness America
500 East Remington Rd.
Schaumburg, IL 60617
800-221-3004 (V)
847-843-8458 (Fax)

Upshot Institute for the Blind
4-Sights Network
16625 Grand River Ave.
Detroit, MI 48227
313-272-3900 (V)
313-272-6893 (Fax)
313-272-7111 (Modem)

For People Who Are Hard of Hearing or Deaf

Alexander Graham Bell Association for the Deaf
3417 Volta Pl., N.W.
Washington, DC 20007
202-337-5520 (V and T)

American Hearing Research Foundation
55 East Washington St., Suite 2022
Chicago, IL 60602
312-726-9670 (V)

Better Hearing Institute
5021-B Backlick Rd.
Annandale,VA 22003
703-642-0580 (V and T)

DeafPride, Inc.
800 Florida Ave., S.E.
Washington, DC 20002
202-675-6700 (V and T)
202-547-0547 (Fax)

Hearing-Vision Impaired Programs
College for Continuing Education
Gallaudet University
College Hall, Rm. 217
800 Florida Ave., N.E.
Washington, DC 20002
202-651-6048 (V and T)

John Tracy Clinic
806 West Adams Blvd.
Los Angeles, CA 90007
213-748-5481 (V)
213-747-2924 (T)

National Association of the Deaf
814 Thayer Ave.
Silver Spring, MD 20910
301-587-1788 (V and T)
301-589-1789 (TTY)

National Information Center on Deafness
Gallaudet University
800 Florida Ave., N.E.
Washington, DC 20002
202-651-5000 (V and T)

Registry of Interpreters for the Deaf
8719 Colesville Rd., Suite 310
Silver Spring, MD 20910
301-608-0050 (V and T)

Self Help for Hard of Hearing People, Inc.
7800 Wisconsin Ave.
Bethesda, MD 20814
301-657-2248 (V)
301-657-2249 (T)

Telecommunications for the Deaf, Inc.
8719 Colesville Rd., Suite 300
Silver Spring, MD 20910
301-589-3786 (V)
301-589-3006 (T)

For People with Mobility Impairments

Accent on Information
P.O. Box 700
Bloomington, IL 61702
309-378-2961 (V)
309-378-4420 (Fax)

Adventures in Movement (AIM) for the Handicapped, Inc.
945 Danbury Rd.
Dayton, OH 45420
513-294-4611 (V)
513-294-3783 (Fax)

American Congress of Rehabilitation Medicine
Association Management Center
5700 Old Orchard Rd.
Glenview, IL 60077
847-966-0095 (V)
847-375-4777 (Fax)

American Physical Therapy Association
1111 North Fairfax St.
Alexandria, VA 22314
703-684-2782 (V)

Disabled American Veterans
807 Maine Ave., S.W.
Washington, DC 20024
202-554-3501 (V)

Gazette International Networking Institute
4502 Maryland Ave.
St. Louis, MO 63108
314-534-0475 (V)
314-534-5070 (Fax)

Learning How, Inc./Opportunities
P.O. Box 35481
Charlotte, NC 28235
704-376-4735 (V)
704-376-4738 (Fax)

Muscular Dystrophy Association, Inc.
3561 East Sunrise Dr.
Tucson, AZ 85718
520-529-2000 (V)
520-529-5300 (Fax)

The National Center for Disability Services
201 I.U. Willets Rd. West
Albertson, NY 11507
516-747-5400 (V)

National Rehabilitation Information Center
8455 Colesville Rd., Suite 935
Silver Spring, MD 20910-3319
800-227-0216 (V)
301-588-9284 (V and T)
301-587-1967 (Fax)

National Spinal Cord Injury Association
600 West Cummings Park, Suite 2000
Woburn, MA 01801
800-962-9629 (V)
617-441-3449 (Fax)

Paralyzed Veterans of America
801 18th St., N.W.
Washington, DC 20006
202-872-1300 (V)

Spina Bifida Association of America
1700 Rockville Pike, Suite 250
Rockville, MD 20852
301-805-0213 (V)

For People with Cognitive Disabilities

American Association on Mental Retardation
444 North Capitol St., N.W., Suite 846
Washington, DC 20001-1512
202-387-1968 (V)

American Psychiatric Association
Division of Public Affairs
1400 K St., N.W.
Washington, DC 20005
202-682-6220 (V)

The ARC
2501 Avenue J
Arlington, TX 76006
817-640-0204 (V)

Educators Publishing Service, Inc.
75 Moulton St.
Cambridge, MA 02238
617-547-6706 (V)

The International Council for Learning Disabilities
National Office
P.O. Box 40303
Overland Park, KS 66204
913-492-8755 (V)

Joseph P. Kennedy, Jr., Foundation
1350 New York Ave., N.W., Suite 500
Washington, DC 20005
202-393-1250 (V)

Learning Disabilities Association of America
4156 Library Rd.
Pittsburgh, PA 15234
412-341-1515 (V)
412-341-8077 (V)

National Alliance for the Mentally Ill
200 North Glebe Rd., #1015
Arlington, VA 22203-3728
703-524-7600 (V)
800-950-NAMI (V)

National Association for the Dually Diagnosed
110 Prince St.
Kingston, NY 12401
914-331-4336 (V)
800-331-5362 (V)

National Association of State Directors of Developmental Disabilities Services, Inc.
113 Oronoco St.
Alexandria, VA 22314
703-683-4202 (V)

National Center for Learning Disabilities
33 West 42nd St.
New York, NY 10036
212-642-2946 (V)

National Depressive and Manic Depressive Association
730 North Franklin St., Suite 501
Chicago, IL 60610
312-642-0049 (V)
312-642-7243 (Fax)

National Institute of Mental Health
5600 Fishers La.
Rockville, MD 20857
301-443-4513 (V)

National Institute of Neurological Disorders and Stroke
National Institutes of Health
Bldg. 31, Rm. 8A16
Bethesda, MD 20892
301-496-5751 (V)

National Mental Health Association
1021 Prince St.
Alexandria, VA 22314
703-684-7722 (V)
800-969-NMHA (V)

Information Services and Vendors

General/Resources for Building Materials and Equipment

The Accessibility Center
Solutions for Easier Living at Hechinger
4500 Wisconsin, D.C. 20016

General Resources

Adaptive Environments Center
374 Congress St., Suite 301
Boston, MA 02110
617-695-1225 (V and T)
617-482-8099 (Fax)

Barrier Free Environments, Inc.
P.O. Box 30634
Highway 70 Water Garden
Raleigh, NC 27622
919-782-7823 (V and T)
919-787-1984 (Fax)

National Center on Accessibility
Bradford Woods/Indiana University
5040 State Rd., 67 North
Martinsville, IN 46151
800-424-1877 (V and T)
317-349-9240 (V and T)

National Endowment for the Arts
Office of Accessibility
100 Pennsylvania Ave., N.W., Rm. 605
Washington, DC 20506
202-682-5532 (V)
202-682-5496 (T)

National Library Service for the Blind and Physically Handicapped
1291 Taylor St., N.W.
Washington, DC 20542
202-707-5100 (V)

National Park Service
Heritage Preservation Service
P.O. Box 37127
Washington, DC 20013-7127
202-343-9587 (V)
202-343-3679 (T)

National Trust for Historic Preservation
1785 Massachusetts Ave., N.W.
Washington, DC 20036
202-673-4189 (V)

Sweet's Accessible Building Products
1221 Avenue of the Americas
New York, NY 10020-1095
800-442-2258 (V)
212-515-2348 (Fax)

Universal Designers & Consultants
1700 Rockville Pike, Suite 110
Rockville, MD 20852
301-770-7890 (V and T)
301-770-4338 (Fax)

U.S. Architectural & Transportation Barriers
Compliance Board (Access Board)
1331 F St., N.W., Suite 1000
Washington, DC 20004-1111
202-272-5434 (V)
202-272-5449 (V and T)
800-USA-ABLE (V and T)

U.S. Department of Justice
Civil Rights Division
Disabilities Rights Section
P.O. Box 66738
Washington, DC 20035-6738
800-514-0301 (V)
800-514-0383 (T)

Brailling

American Printing House for the Blind
1839 Frankfort Ave.
P.O. Box 6085
Louisville, KY 40206
502-895-2405 (V)
502-899-2274 (Fax)

Blind Industries & Services of Maryland
2901 Strickland St.
Baltimore, MD 21223
410-233-4567 (V)
410-233-0544 (Fax)

Columbia Lighthouse for the Blind
1421 P St., N.W.
Washington, DC 20005
202-462-2900 (V)

National Braille Press
88 St. Stephen St.
Boston, MA 02115
617-266-6160 (V)
800-548-7323 (V)

National Federation of the Blind
National Center for the Blind
180 Johnson St.
Baltimore, MD 21230
410-659-9314 (V)

Recording for the Blind and Dyslexic
20 Roszel Rd.
Princeton, NJ 08540
609-452-0606 (V)
800-221-4792 (V)
609-520-7990 (Fax)

Volunteers for the Visually Handicapped
8720 Georgia Ave., Suite 210
Silver Spring, MD 20910
301-589-0894 (V)

Captioning

Caption Center
WGBH
125 Western Ave.
Boston, MA 02134
617-492-9225 (V and T)
475 Park Avenue South, 10th Fl.
New York, NY 10016
212-545-0854 (V)
212-545-8546 (T)
212-545-0957 (Fax)

Caption Reporters, Inc.
717 D St., N.W., Suite 210
Washington, DC 20004
202-737-5800 (V)
202-737-1132 (T)
202-737-1141 (Fax)

Computer Prompting & Captioning Co.
3408 Wisconsin Ave., N.W.
Washington, DC 20016
301-738-8487 (V)
301-738-8488 (V)

Image Logic
6807 Brennon La.
Chevy Chase, MD 20815
301-907-8891 (V and T)
301-652-6584 (Fax)

National Captioning Institute
1900 Gallows Rd., #3000
Vienna, VA 22182-3865
703-917-7600 (V)
545 Fifth Ave., Rm. 1403
New York, NY 10017
212-557-7011 (V and T)

VITAC
312 Boulevard of the Allies
Pittsburgh, PA 15222-1916
412-261-1458 (V)
412-232-6344 (T)
412-261-6257 (Fax)
733 15th St., N.W., Suite 420
Washington, DC 20005-2112
202-783-7333 (V and T)
202-638-3740 (Fax)

Interpreting Services

CAPCOM Interpreting Services
P.O. Box 149
McLean, VA 22101
703-442-9788 (V and T)

Centralized Interpreter Referral Service
2220 St. Paul St.
Baltimore, MD 21218
410-243-3800 (V)
410-243-1275 (T)

Deaf Access Services
P.O. Box 3104
Frederick, MD 21705-3104
301-696-1550 (V and T)

Deaf Consultants and Interpreting Services
10501 East Wind Way
Columbia, MD 21044
410-730-1437 (V and T)

DeafPride, Inc.
800 Florida Ave., N.E.
Washington, DC 20003
202-675-6700 (V and T)
202-547-0547 (Fax)

Sign Language Associates
8630 Fenton St., Suite 406
Silver Spring, MD 20910
301-588-7591 (V and T)
301-588-3021 (Fax)

Sign Language Connection, Inc.
P.O. Box 3300
Gaithersburg, MD 20885-3300
301-340-0851 (V and T)
301-279-0115 (Fax)

Assistive Listening Systems

Duartek, Inc.
11150 Main St., #105
Fairfax, VA 22030
703-352-2286 (V and T)

Harris Communications
Department TDI-94
15159 Technology Dr.
Eden Prairie, MN 55344-7714
800-825-6758 (V)
612-906-1099 (Fax)

Hear More Products
P.O. Box 3413
Farmingdale, NY 11735
516-752-0738 (V and T)
516-752-0689 (Fax)

Potomac Technology
One Church St., Suite 402
Rockville, MD 20850
301-762-4005 (V)
800-433-2838 (V)
301-762-0851 (T)

Sound Remedy
59 West 12th St.
New York, NY 10011
212-242-1036 (V and Fax)
212-242-5952 (T)

Accessible Signage and Graphics

APCO USA
388 Grant St., S.E.
Atlanta, GA 30312-2227
404-688-9000 (V)
404-577-3847 (Fax)

ASI Sign Systems
4289 Red Bandana Way
Ellicott City, MD 21042
410-461-0505 (V)
410-461-0501 (Fax)

Best Manufacturing Sign Systems
1202 North Park Ave.
Montrose, CO 81401-3170
970-249-2378 (V)
970-249-0223 (Fax)

Intelligent Signage, Inc.
575 Interstate Blvd.
Sarasota, FL 34240
813-379-5811 (V)

Interface Architectural Signage
9906 Rustic Rail La.
Vienna, VA 22181
703-319-1235 (V)
800-445-4796 (V)

Mohawk Sign Systems
P.O. Box 966
Schenectady, NY 12301-0966
518-370-3433 (V)
518-370-3332 (Fax)

Poblocki & Sons, Inc.
922 South 70th St.
West Allis, WI 53214
414-453-4010 (V)
800-776-7064 (V)
414-453-1055 (Fax)

Scott Sign Systems, Inc.
P.O. Box 1047
Tallevast, FL 34270-1047
800-237-9447 (V)
941-355-5171 (V)
941-351-1787 (Fax)

Accessible Computer Programming Technology

Center for Technology in Education
2500 East Northern Parkway
Baltimore, MD 21214-1113
410-254-8466 (V)

Clearinghouse on Computer Accommodation
General Services Administration
18th & F Sts., N.W., Mailstop KBA
Washington, DC 20405
202-501-4906 (V and T)

Equal Access to Software and Information
Rochester Institute of Technology
714-830-0301 (V)
714-830-2159 (Fax)
www.rit.edu/~easi

Trace Center for Research and Development
S-151 Waisman Center
1500 Highland Ave.
Madison, WI 53705
608-262-6966 (V)
608-262- 5408 (T)

Resources for Developing Accessible Websites

Trace Research and Development Center
trace.wisc.edu

CPB/WGBH National Center for Accessible Media
www.wgbg.org/ncam

Center for Applied Special Technology (CAST)
www.cast.org/bobby

Audiodescription

Audio Description, Inc.
The Metropolitan Washington Ear, Inc.
35 University Blvd. East
Silver Spring, MD 20901
301-681-6636 (V)

Audio vision

Descriptive Video Service
WGBH-TV
125 Western Ave.
Boston, MA 02134
617-492-3490 (V)
617-492-9258 (T)

Joel Snyder
8401 Barron St.
Takoma Park, MD 20912
202-682-5591 (V)
202-682-5496 (T)
jsnyder@artswire.org (e-mail)

Narrative Television Network
5840 South Memorial Dr., Suite 312
Tulsa, OK 74145
918-627-1000 (V)

Resource Publications

Barrier Free Environments, **The Arts and 504: A 504 Handbook for Accessible Arts Programming.** Washington, D.C.: National Endowment for the Arts, 1992 (revised).

Davidson, Betty. **New Dimensions for Traditional Dioramas; Multisensory Additions for Access, Interest and Learning.** Boston: Museum of Science, Boston, 1991.

Majewski, Janice. **Part of Your General Public Is Disabled: A Handbook for Guides in Museums, Zoos, and Historic Houses.** Washington, D.C.: Smithsonian Institution, 1987.

Parks Canada Access Series: Design Guidelines for Media Accessibility. Ottawa: Minister of Supply and Services, 1993.

Parks Canada Access Series: Design Guidelines for Accessible Outdoor Recreation Facilities. Ottawa: Minister of Canadian Heritage, 1994.

National Assembly of State Arts Agencies and National Endowment for the Arts. **Design for Accessibility: An Arts Administrator's Guide.** 1994.

Kennedy, Jeff. **User Friendly: Hands-On Exhibits That Work.** Washington, D.C.: Association of Science-Technology Centers, 1990.

Shapiro, Joseph. **No Pity: People with Disabilities Forging a New Civil Rights Movement.** New York: Random House, 1993.

Section D

Glossary

Glossary

Access Aisle An accessible pedestrian space between elements, such as parking spaces, seating, and desks, that provides clearances appropriate for use of the elements.

Accessible Route A continuous, unobstructed path connecting all accessible elements and spaces of a building or facility.

Ambient Light The total amount of light in a space, including light from direct sources and light reflected from all surfaces in that space. Ambient light in most museum exhibitions is reflective.

Assistive Listening System Sound technology, usually found in auditoriums and theaters, that allows hard-of- hearing individuals to better hear speakers or actors.

Audio description Technique for informing visitors about the visual images and action of a video, stage, or an exhibition space that are undescribed in the narration. See Appendix for Audio description symbol.

Cane-detectable Barrier A barrier used to warn people who are blind or have low vision of a hazard. The barrier is something detected by the cane before the individual reaches the obstruction or hazard with his body.

Captioning ***Open captioning*** translates the audio portion of a video or film program into visible subtitles. Viewing does not require special equipment; the captions are present on the screen at all times. ***Closed captioning*** requires a decoder for display on a standard television receiver and can be switched on and off by the visitor on demand. See Appendix for closed captioning symbol.

Clear Floor Space The minimum unobstructed floor or ground space required to accommodate a single, stationary wheelchair and occupant.

Cognitive Disabilities Disabilities that affect learning and socialization skills (e.g. mental retardation, learning disabilities, mental illness).

Cross Slope The slope that is perpendicular to the direction of travel.

Detectable Warning A standardized surface feature built in or applied to walking surfaces or other elements to warn people with visual impairments of hazards on a circulation path.

Footcandle (fc) and lux Measurements of the visible light intensity on a surface some distance from the light source. One footcandle is equivalent to the illumination produced by one candle

(an optical standard reference) at a distance of 305 mm (one foot). One footcandle equals approximately ten lux. Footcandle is the imperial measure, while lux is the metric measurement for light intensity.

Kerning In typesetting, adjusting the spacing between two characters.

Leading In typesetting, the vertical distance between lines of type, measured in points.

Letter spacing The spaces between each letter in a word. Light Reflectance Value A relative term used to describe how well a surface reflects light. Contrast is calculated in percent between foreground and background, e.g. light color on dark background. The standard for readability is a contrast of at least 70%. The readability is determined by the formula:

Contrast=[(B1-B2)/B1] x 100

where B1= light reflectance value (LRV) of the lighter area

and B2= light reflectance value of the darker area.

Lux See "Footcandle (fc) and lux"

Maneuvering Space The minimum area needed for a wheelchair user to move into or out of a place, or along a pathway.

Means of Egress A continuous and unobstructed way of exit travel from any point in a building or facility to a public way. A means of egress includes vertical and horizontal travel and may include intervening room spaces, doorways, corridors balconies, ramps, stairs, enclosures, lobbies, horizontal exits, courts, and yards. An ***accessible means of egress*** is one that complies with ADA guidelines and does not include stairs, steps, or escalators. Areas of rescue assistance or evacuation elevators may be included as part of accessible means of egress.

Pica A basic unit of typographic measurement representing 4.23 mm (1/6 in.). A pica equals 12 points (see "point size"). The pica is used for linear measurements of type.

Point size A point is a unit of measure used principally for designating type size. In traditional typesetting a point is equal to approximately .35 mm (1/72 in.). PostScript, used in DTP (desktop publishing), defines a point as exactly .35 mm (1/72 in.). The point size of a face is the distance from the top of its ascenders to the bottom of its descenders.

Power-assisted Door A door used for human passage with a mechanism that either helps to open the door or relieves the opening resistance of a door upon switch activation or continued force applied to the door itself.

Serif The short cross-lines at the ends of the main strokes of many letters in some typefaces. ***Sans serif*** are letters without the crosslines.

Short person A person who might formerly have been known as a "dwarf" or "midget,"p erhaps under 1015 mm (40 in.) tall.

Sightline The line of view between a person in an audience and a performance, speaker, or displayed item.

Signage Displayed verbal, symbolic, tactile, and/or pictorial information.

Slip-resistant surfaces Surfaces that will permit an individual to walk across without slipping. Materials that may be adequate to make level surfaces slip-resistant might be inadequate on sloping surfaces.

Tactile Permits examination of an object that can be perceived using the sense of touch.

TTY (preferred term), or **TDD** (Telecommunications Device for the Deaf). These communication machines are also called "text telephones." They use interactive graphic (i.e. typed) communications through the transmission of coded signals across the standard telephone network. The TTY, or teletypewriter was the equipment first utilized by a deaf inventor as a communication tool for deaf people. See Appendix for TTY symbol.

Vitrine A free-standing pedestal with a five-sided, clear top. The top has no light attic.

Word spacing The space between words in a line of text.

X-height The height of a typeface's lower case letters exclusive of ascenders and descenders. The height of the lower case "x" is often measured since it sits directly on the baseline and has neither descenders or ascenders. Although not a unit of measurement it is important since it is the x-height that conveys the visual impact of the type size. Faces with a high x-height tend to look larger.

Section E

Appendix

Checklist for Publications

Please see the Smithsonian Guidelines for Accessible Publication Design

Language that appropriately describes people with disabilities

Yes	No
People with disabilities	the handicapped, the disabled
People who are deaf or hard of hearing	the hearing impaired, deaf-mute
People who are blind or have low vision	the blind, the sightless
Wheelchair users	those confined to wheelchairs, wheelchair bound
People with mobility impairments	the crippled, the lame
People with cognitive disabilities	the retarded, the mentally deficient
People with mental illness	schizophrenic (as a generic), the insane
People with learning disabilities	dyslexic (as a generic), the retarded

Fig. 2 Use language that appropriately describes people with disabilities

Notes to remember:

People with disabilities are not *suffering from, victims of, or afflicted by* their disabilities.

They are not *overcoming their disabilities* so much as the barriers that the rest of society puts in front of them.

People with disabilities are neither saints nor the worst of sinners--they do not want to be portrayed as *courageous or tortured*, but rather as individuals who find alternative means to accomplish everyday activities.

People with disabilities do not have *special needs*, but do require *certain accommodations* to make the best use of museums--programs, exhibitions, and facilities.

People with disabilities make up the largest so-called minority group in the United States. We are talking about 54 million (and growing) of us, not them.

Disability Access Symbols

The following 12 symbols, along with accompanying text, were developed for the Disability Access Project by the Graphic Artists Guild Foundation*. These symbols may be used to promote and publicize accessibility of places, programs, and other activities for people with various disabilities.

Copies of these symbols in both positive and negative form are available on either PC or Mac disk for $16.45 (including shipping)** from:

Graphic Artists Guild Foundation
11 West 20th Street, 8th Floor
New York, NY 10011-3704
212-463-7730
FAX: 212-463-8779

These symbols may also be downloaded from the Graphic Artists Guild Foundation at its website:

www.gag.org (for its home page)
Click on the GAG Foundation Icon

General information

Any language accompanying the symbols should focus on the accommodation or service, not on who uses it. For example, "Ramped Entrance" may accompany the wheelchair symbol. This is important because not only do individuals in wheelchairs use ramps, but so do people with baby carriages, luggage, etc. Language that fosters dignity is important, too. For example, "Reserved Parking" or "Accessible Parking" may be used with the wheelchair symbol to indicate parking spaces designated for people with disabilities.

*The Office of Special Constituencies, National Endowment for the Arts also provided support and technical assistance for this project.
**In New York State cost is $17.80.

1. **Information Symbol:**
   The most valuable commodity of today's society is information; to a person with a disability, it is essential. For example, the symbol may be used on signage or on a floorplan to indicate the location of the information or security desk, where there is more specific information or materials concerning access accommodations and services such as "LARGE PRINT" materials, audio cassette recordings of materials, or sign-interpreted tours.

2. **International Symbol of Accessibility:**
   The wheelchair symbol should only be used to indicate access for individuals with limited mobility, including wheelchair users. For example, the symbol is used to indicate an accessible entrance or bathroom or that a phone is lowered for wheelchair users. Remember that a ramped entrance is not completely accessible if there are no curb cuts. An elevator is not accessible if it can only be reached via steps.

3. Live Audio description:

A service for people who are blind or have low vision that makes the performing and visual arts accessible. A trained Audio Describer offers live commentary or narration (via headphones and a small transmitter) consisting of concise, objective descriptions of visual elements. For example, a theater performance or a visual arts exhibition at a museum may be audio described.

4. Audio description for TV, Video and Film:

This service makes television, video, and film more accessible for persons who are blind or have low vision. Description of visual elements is provided by a trained Audio Describer through the Secondary Audio Program (SAP) of televisions and monitors equipped with stereo sound. An adapter for non-stereo TVs is available through the American Foundation for the Blind, 800-829-0500.

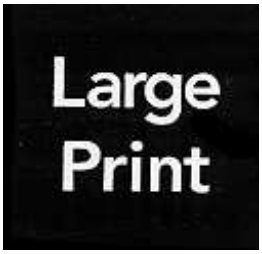

5. **Accessible Print:**
   The symbol for large print is "Large Print" printed in 18 point or larger text. In addition to indicating that large-print versions of books, pamphlets and museum guides are available, use of the symbol on conference or membership forms can indicate that print materials are available in large format. Sans serif or modified serif print with good contrast is highly recommended, and special attention should be paid to letter and word spacing.

6. **Access (Other Than Print or Braille) for Individuals Who Are Blind or Have Low Vision:** This symbol may be used to indicate access for people who are blind or have low vision, including a guided tour, a path to a nature trail or a scent garden in a park; and a tactile tour or a museum exhibition that may be touched.

7. **Braille Symbol:**
   This symbol indicates that printed matter is available in Braille, including exhibition labeling, publications, and signage.

8. **Telephone Typewriter (TTY):**
   Also known as text telephone (TT), or telecommunications device for the deaf (TDD), TTY indicates a device used with the telephone (and the phone number) for communication between deaf, hard of hearing, speech-impaired, and/or hearing persons**.**

9. Sign-Language Interpreted:

The symbol indicates that Sign-Language Interpretation is provided for a lecture, tour, performance, conference, or other program.

10. Assistive Listening Systems:

These systems transmit amplified sound via hearing aids or headsets. They include infrared, loop, and FM systems. Portable systems may be available from the same audiovisual equipment suppliers that service conferences and meetings.

11. **Volume Control Telephone:**
    This symbol indicates the location of telephones that have handsets with amplified sound and/or adjustable volume controls.

12. **Closed Captioning (CC):** This symbol indicates that a television program or videotape is closed captioned for deaf or hard-of-hearing persons (and others). TV sets that have a built-in or a separate decoder are equipped to display dialogue for programs that are captioned. The Television Decoder Circuitry Act of 1990 requires new TV sets (with screens 330 mm [13 in.] or larger) to have built-in decoders as of July 1993. Also, videos that are part of exhibitions may be closed captioned using the symbol with instructions to press a button for captioning.

13. International Symbol of Access for Hearing Loss

This symbol (the only one that is not part of the Disability Access Project) is the International Symbol of Access for Hearing Loss. It may be used when access is provided for people who are deaf or hard-of-hearing.

List of Illustrations

Fig. 1 Including people with disabilities in exhibit text
(Text Courtesy Arthur M. Sackler Gallery)

The Professional Basketmaker

When he was three years old, Hiroshima Kazuo dislocated his hip, an injury that was considered untreatable and left him with a permanent limp. Kazuo was therefore unable to help his parents and seven siblings work their fields, which were terraced along a mountainside; neither, as the second son, would he inherit any land. And so he became an apprentice to a local basketmaker at fifteen, taking up the life of an itinerant basketmaker three years later.

Fig. 2 Use language that appropriately describes people with disabilities

YES:
People with disabilities
People who are deaf or hard of hearing
People who are blind or have low vision
Wheelchair users
People with mobility impairments
People with cognitive disabilities
People with mental illness
People with learning disabilities

NO:
The handicapped, The disabled The blind, The sightless
The hearing impaired, deaf mute
those confined to wheelchairs, wheelchair bound
the crippled, the lame
the retarded, the mentally deficient
schizophrenic (as a generic), the insane
dyslexic (as a generic), the retarded

Fig. 3 Average viewing sightlines

Figure shows average viewing sightlines for a person standing and for a person using a wheel chair.

Fig. 4 Protruding object hazard

(figure shows cane user in contact with wall mounted object/casing)
Objects mounted above 685 mm (27 in.) are a hazard for cane users.

Fig. 5 Protruding object warning

(figure shows cane user in contact with floored object)

Fig. 6 Height of table case

(figure shows wheelchair user and standing individual both able to view encased exhibit contents)

Fig. 7 Alternate access using photographs of objects

Figure shows person looking at a photo of an airplane. The actual airplane hangs above head level.

Fig. 8 Accessible lighting levels

Accessible Lighting Levels
Ambient lighting, 50-300 lx, 5-30 fc
Text panels, 100-300 lx, 10-30 fc
Controls, 100 lx, 10 fc
Directional signage, 200-300 lx, 20-30 fc
Specimens, objects, 100-300 lx, 10-30 fc
Ramps, Stairs, 100-300 lx, 10-30 fc
Visitor pathways, 100,-300 lx, 10-30 fc

Fig. 9 Sample of Audio description text

Sample of audiodescription script (for film: "Destiny in Space")
Courtesy the National Air and Space Museum

Fig. 10 Writing a short overview paragraph

(overview is first paragraph shown here in boldface)

Text courtesy the Center for African American History and Culture

Visual Journal: Harlem and D.C. in the Thirties and Forties Photographers were honored members of the African American community during the 1930's and 1940's. They recorded the lives of black people, their cultures, and the changes of African American experience in the United States at that time. This exhibition shows you the work of seven photographers who documented people and events in Washington, D.C., New York City's Harlem, and rural Virginia.

Photographers are visual storytellers. They illustrate our place in society, document our dreams, and preserve powerful memories. In the 1930's and 1940's, in cities all over America, the black public was enthusiastic about having their image preserved at the local studio. They enshrined their local photographers who encouraged by the numerous...

Fig. 11 Line drawings, silhouettes, and photographs aid comprehension

Drawings and text courtesy the National Museum of African Art.

Vessel-- Before 1930. Teke peoples, Congo and Zaire. Fired Clay, incised decoration, slip. Ex-collection. J Walsharts 89-13-49.

Water Jar -- Before 1920. Songo people, Zaire and Angola. Fired clay, incised decoration. 89-13-6

Fig. 12 Accessible type by probable viewing distance

Probable viewing distance, Interpretive exhibits minimum type size (Helvetica reg.) X-Height, mm(in.), Set size (pt)

less than 75 mm (3 in.), 4.5 (3/16), 24 1 m (39 in.), 9 (3/8), 48
2 m (78 in.), 19 (3/4), 100
3 m (118 in.), 28 (1-1/8), 148
Courtesy Parks Canada, Design Guidelines for Media Accessibility

Fig. 13 Font Proportions

-- courtesy Parks Canada, Design Guidelines for Media Accessibility

The proportions of a font refer to its width, x-height, and weight, and contribute to legibility.

Width (percentage of width to height of the upper-case 'X') should be 65% to 95% for accessibility. This includes most condensed roman or regular fonts (Helvetica Regular is 89%). Serifs bias this figure somewhat; allowable widths in this would be 75%-105%. Extended faces (with widths greater than 95% for sans serif, 105% for serif) are less readable. If width is adjusted using desktop publishing software (horizontal scaling), care should be taken not to exceed the recommended proportions.

X-height (percentage of width of the vertical stoke of the lowercase 'x= to the uppercase 'X') should be 65%-75%. Few fonts have higher 'x-heights (Helvetica regular is 72.5%) if a font with a lower x-height is used, the type size shall be increased to achieve readability).

Weight (percentage of width of the vertical stroke of the lower-case 'x' to the heights of the upper-case 'X') should be 10%-15% for text. This corresponds roughly to the roman or regular proportions (Helvetica Regular is 12%). Certain faces, generally serfs, have 'thicks' and 'thins' in their stroke weights; these faces are more readable if the thicks are 10%-15% of the height of the upper-case 'X' and the thins are no less than 5%.

1 Accessible for text: Helvetica Regular
2 Not accessible (too light): Helvetica Light
3 Not accessible (too bold): Helvetica Bold

Fig. 14 Font samples

Courtesy Parks Canada, Design Guidelines for Media Accessibility

Accessible for text (weight 3%, x-height 3%, width 3%)

Serif:
Times Roman (11, 69, 105)
New Century Schoolbook (13, 71, 103)

Sans Serif:
Helvetica (12, 72.5, 89)
Univers 45 (7, 71, 84)
Futura Light (6, 61, 63)
Decorative:
Linoscript (9, 31, 130)

Fig. 15 Notes on "Legibility" and "Readability"

Legibility and readability are different concepts. 'Legibility' refers to how the design of letter forms that make up a particular font influences word recognition. Legibility

contributes to 'readability', or the ease of reading, which is determined by the combined impact of certain type size, kerning, line and word spacing, and line length.

A particular font may evoke a certain mood or time period, but may not be very legible if used for text. For instance, a designer who wishes to display a letter in a script font to suggest it was written with a quill pen should treat the letter as an illustration, rather than as text. If the letter contains important information, a transcription in legible font should be provided.

Fig. 16 Illustrations that support verbal instructions contribute to the overall effectiveness of the interactive activity

(Illustrations are associated with the following instructions)

Temperature Investigation
Do styrofoam cups keep liquids warmer than paper cups?
See-for-yourself: styrofoam versus paper
Use the cups, water supply and thermometers to check it out.
Does the amount of water in each cup make a difference?

Fig. 17 Forward reach of a person using a wheelchair

Note: x shall be less than or equal to 635 mm (25 in.); z shall be greater than or equal to it. When x is less than 510 mm (20 in.), then y shall be 1220 mm (48 in.) maximum. When x is 510 to 635 mm (20-25 in.), then y shall be 1120 mm (44 in.) maximum.

a. High forward reach
b. Maximum forward reach over an obstruction

Fig. 18 Side reach of a person using a wheelchair

a. High and Low side reach limits
b. Maximum side reach over an obstruction

Fig. 19 Providing work stations with seating minimizes the differences between seated and standing visitors

Fig. 20 Wheelchair turning space

a. 1525 mm (60 in.) diameter space
b. T-shaped space for 180 degree turns

Fig. 21 Dimensions of adult-sized wheelchair

Note: Footrests may extend further for very large people

From rear:
from base to handle: 36 inches
from base to armrest: 30 inches

From front:
from base to toe: 8 inches
from base to seat: 19 inches
from base to lab: 27 inches
from base to eye level: 43-51 inches

clear floor space:
760 mm (30 in.) by 1220 mm (48 in.)
from left rear wheel to right rear wheel: 26 inches
from rear wheel to front foot rest: 42 inches
from front left toe to right toe: 18 inches

Fig. 22 Minimum clear width for single wheelchair

side by side, from rear: 36 inches

Fig. 23 Minimum clear width for two wheelchairs

60 inches

Fig. 24 Width of accessible route

a. 90 degree turn
b. turns around an obstruction

Fig. 25 Overhead hazards

There must be at least 2030 mm (80 in) of clear head room along the circulation route.

Obstacles to be avoided include overhanging works of art, exhibit props, ceiling-mounted signs, plants, and low space under items such as escalators.

Fig. 26 Cane detection of wall hung case

Wall hung objects with bottom edges below 685 mm (27 in.) alert cane users to their presence.

Fig. 27 Cane technique

A cane user will detect objects within a sweep that extends approximately 150 mm (6 in.) to either side of his shoulders

Fig. 28 Changes in level

a. less than 6.4 mm (1/4 in.)
b. between 6.5 mm and 13 mm (1/4-1/2 in.)

Fig. 29 Table case height

Maintaining base of table case at 685 mm (27 in.) above floor provides both cane detection and knee space for wheelchair users.

Fig. 30 Case heights for accessible viewing

(figure shows cases of varying heights and widths measured from base to top)

Fig. 31 Seating

Accessible spaces adjacent to fixed seating allow a person in a wheelchair to sit with persons with whom they may be traveling.

Fig. 32 Wheelchair seating dispersed throughout seating area

Source: UFAS Retrofit Manual

Spaces for people using wheelchairs must be an integral part of the seating plan and must always be near fixed seating. Examples follow:

837 mm (33 in.) by 1200 mm (48 in.) space for single wheelchair.
1525 mm (60 in.) by 1220mm (48 in.) midpoint position for two wheelchairs: omit six chairs or install movable chairs
1675 mm (66 in.) by 1220 mm (48 in.) Additional single and double wheelchair spaces may be provided using removable seats

1675 mm (66 in.) by 1220 mm (48 in.) back or front row position for two wheelchairs; omit three chairs (parked wheelchairs should not obstruct other pedestrian traffic) Aisle width must allow passage of wheelchair users; fire codes should be consulted to determine required width

Fig. 33 Space requirements for wheelchair seating spaces in series

a. forward or rear access

b. side access

Production Notes

Project Director Janice Majewski
Content Advisors Virginia Mahoney; Diana Cohen Altman
Editing Diana Cohen Altman
Design Virginia Mahoney
Illustration Credits

Arthur M. Sackler Gallery: Figure 1

Americans with Disabilities Act Accessibility Guidelines (ADAAG): Figures 17, 18, 20, 21, 22, 23, 24, 25, 27, 28, 33

Center for African American History and Culture: Figure 10

Museum of Science, Boston, MA: Figure 16

National Air and Space Museum: Figure 9

National Museum of African Art: Figure 11

Parks Canada *Design Guidelines for Media Accessibility*: Figures: 8,12,13, 14, 15

UFAS Retrofit Manual: Figure 32

Additional drawings by Stevan Fisher:
Figures: 3, 4, 5, 6, 7, 19, 26, 29, 30, 31
Note: figures 3,6, and 30 are based on drawings by Barrier Free Environments, In., in The Arts and 504: A 504 Handbook for Accessible Arts Programming.